INSTRUCTION MANUAL

Type 132 Plug-In Unit Power Supply

TEKTRONIX
MANUFACTURERS OF CATHODE-RAY OSCILLOSCOPES

WARRANTY

All Tektronix instruments are warranted against defective materials and workmanship for one year. Tektronix transformers, manufactured in our own plant, are warranted for the life of the instrument.

Any questions with respect to the warranty mentioned above should be taken up with your Tektronix Field Engineer.

Tektronix repair and replacement-part service is geared directly to the field, therefore all requests for repairs and replacement parts should be directed to the Tektronix Field Office or Representative in your area. This procedure will assure you the fastest possible service. Please include the instrument Type and Serial number with all requests for parts or service.

Specifications and price change privileges reserved.

Copyright © 1961, new material copyright 1966 by Tektronix, Inc., Beaverton, Oregon. Printed in the United States of America. All rights reserved. Contents of this publication may not be reproduced in any form without permission of the copyright owner.

CONTENTS

Section 1	Operating Instructions
Section 2	Circuit Description
Section 3	Maintenance and Calibration
	Abbreviations and Symbols
	Parts Ordering Information
Section 4	Electrical Parts List
	Mechanical Parts List Information
Section 5	Mechanical Parts List
Section 6	Diagrams
	Mechanical Parts List Illustrations
	Accessories

Abbreviations and symbols used in this manual are based on, or taken directly from, IEEE Standard 260 "Standard Symbols for Units", MIL-STD-12B and other standards of the electronics industry. Change information, if any, is located at the rear of this manual.

Fig. 1-1. The Tektronix Type 132 Plug-In Unit Power Supply with a Type CA Plug-In Unit.

SECTION 1
OPERATING INSTRUCTIONS

Introduction

The Type 132 Plug-In Power Supply, Fig. 1-1, contains the necessary circuitry for powering Tektronix lettered-series plug-in units. Completely self contained, the Type 132 allows independent operation of a plug-in unit in conjunction with an indicating device to obtain increased wideband sensitivity and/or multi-trace displays.

Table 1-1 shows typical gain and bandpass characteristics of the Type 132 when operated with the various plug-in units. As shown in the Table, gain and bandpass are determined by the type of plug-in unit and the output impedance. It should be noted that higher gain (with a corresponding decrease in bandpass) can be obtained with higher values of termination impedance.

Accessories

Information on accessories for use with this instrument is included at the rear of the mechanical parts list.

Cooling

A fan at the rear of the Type 132 circulates air through the instrument and maintains a safe operating temperature. Cooler internal temperatures provide increased stability and component life.

The side panels of the instrument are especially designed to direct circulating air over the heat-producing components. The instrument should therefore not be operated for prolonged periods without its side panels in place. *Note: When replacing the side panels, be sure to place the perforations toward the front of the instrument.* Also, when selecting the proper location for the instrument, choose a spot that will not restrict air flow in and around the instrument. If the internal temperature of the Type 132 rises above 137° F., a thermal cutout will shut off instrument power. Power is automatically restored once the internal temperature returns to normal.

Line Voltage

A metal tag at the rear of the Type 132 indicates the line voltage required for proper operation. If the instrument is wired for 117-volt operation, it will perform satisfactorily at line voltages between 105 and 125 volts, 50-60 cycles. Line voltages outside the specified limits may cause the power supplies to go out of regulation. A 3-ampere fast-blow fuse is required for 117-volt, 60-cycle operation. For 50-cycle operation, use a 3.2-ampere slow-blow fuse.

If desired, you can convert the instrument from 117-volt operation to 234-volt operation, or vice versa, by changing the wiring to the fan and the primary of the power transformer. Fan and transformer connections are shown in Fig. 1-2 and on the Power Supply schematic. An instrument wired for 234-volt operation will perform satisfactorily at line voltages between 210 and 250 volts, 50-60 cycles. A 1.5-ampere fast-blow fuse is required for 234-volt, 60-cycle operation. For 50-cycle operation, use a 1.6-ampere slow-blow fuse.

If the line voltage in your area is consistently high or low with respect to the foregoing nominal voltages, use the auxiliary windings on the power transformer, as shown in Fig. 1-2. The windings may be connected to either aid or oppose the primary windings. This raises or lowers the regulating range by about 6% from either 117 or 234 volts.

Power consumption of the Type 132 (with plug-in unit) is 225 watts maximum.

Installing a Plug-In Unit

The Type 132 is designed to accept any of the Tektronix lettered-series plug-in units. When inserting the plug-in unit into the Type 132 make sure the interconnecting plugs of both instruments are properly aligned. Once aligned, the plug-in unit will slide into the Type 132 and seat firmly with very little effort. After seating the plug-in unit, tighten the aluminum knob at the bottom center of the plug-in unit. To tighten the knob, turn it a few turns clockwise until it is hand-tight. To remove a plug-in unit, turn the knob counterclockwise until it releases from the Type 132 and then, pulling by the aluminum knob, pull the plug-in unit out of the opening.

Signal Connections

If possible, make all signal connections to and from the Type 132 with short-length coaxial cables. This will minimize noise pickup and give good bandpass characteristics. This is especially important when you are working with high-frequency and/or low-level signals. Also, when working with high frequencies, you should terminate the cables in their characteristic impedance. Best bandwidth characteristics will be obtained if you terminate the coaxial cables at each end (double termination). Terminating will minimize reflections and resonance effects such as ringing. If, for some reason, you are not using coaxial cables, be sure to establish a common ground between the Type 132, signal source, and the indicating unit (oscilloscope, recorder, etc.).

DC LEVEL and GAIN ADJ.

The first time you use your Type 132, or any time you change plug-in units, the front-panel DC LEVEL and GAIN ADJ. should be checked and adjusted as necessary. You should also do this occasionally during the regular use of the instrument.

With the DC LEVEL adjustment properly set and the Position control of the plug-in unit centered, the no-signal dc output voltage of the instrument is zero. This provides the best dynamic balance for the instrument.

With the GAIN ADJ. properly set, the input signal amplitude can be readily determined. This is especially important if you desire to make critical voltage measurements at the output of the Type 132.

The procedure for setting the DC LEVEL and GAIN ADJ. is described in the Calibration section of this manual.

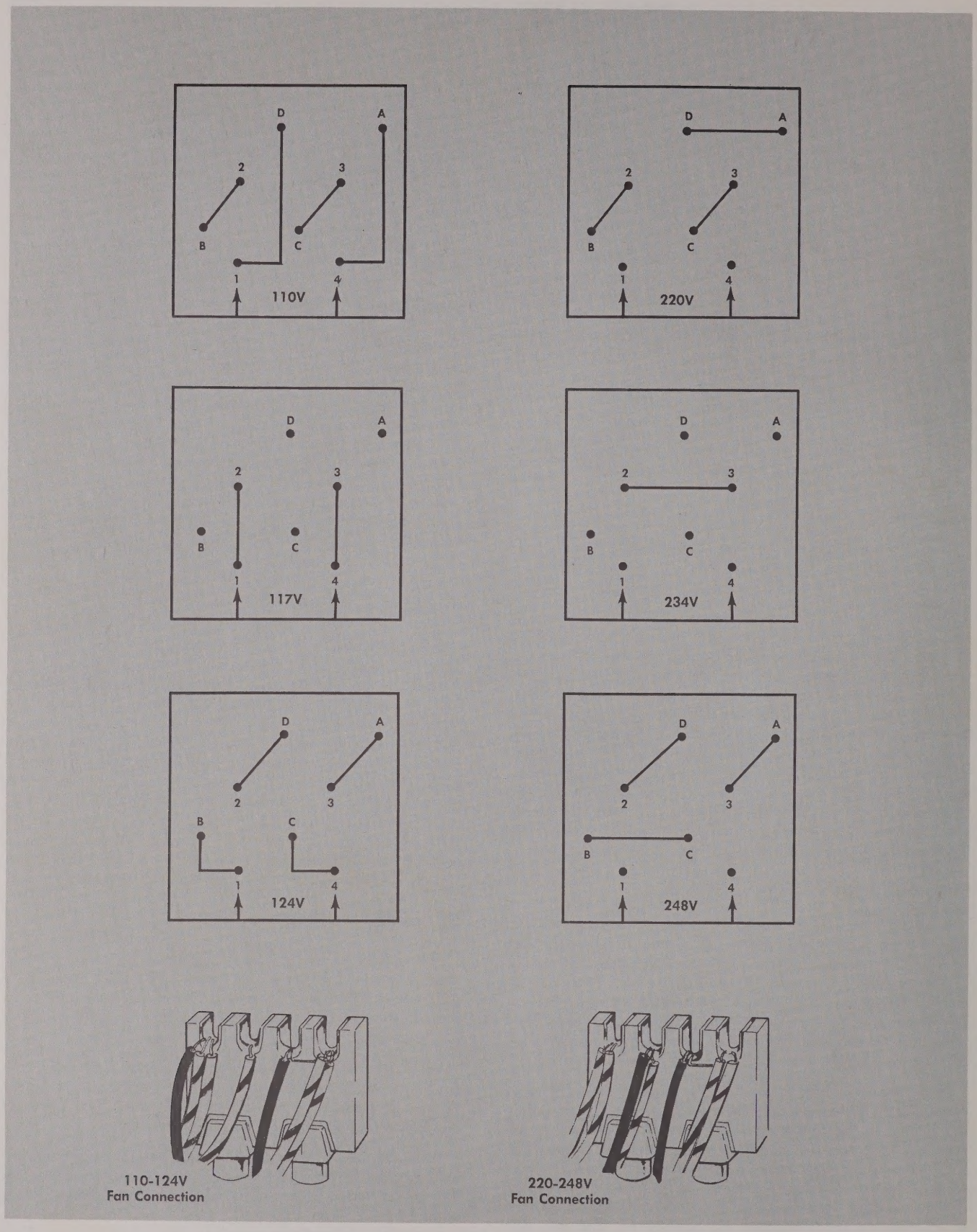

Fig. 1-2. Fan and transformer connections.

TABLE 1-1

TYPE 132 TYPICAL PERFORMANCE

		Performance* No termination			Performance* 93 Ω termination			Performance* Double 93 Ω termination		
Plug-In Type	Noise Referred to Input	System† Gain	Rise Time	Band Width	System† Gain	Rise Time	Band Width	System† Gain	Rise Time	Band Width
A	200 μv	500	1 μsec	dc-500 kc	10	28 nsec	dc-14 mc	5	22 nsec	dc-16 mc
B	200 μv	500 5000	1 μsec	dc-500 kc 2c-500 kc	10 100	28 nsec 35 nsec	dc-14 mc 2c-10 mc	5 50	22 nsec 35 nsec	dc-16 mc 2c-10 mc
CA	200 μv	500	1 μsec	dc-500 kc	10	28 nsec	dc-14 mc	5	22 nsec	dc-16 mc
D	100 μv	Useful to 20,000	1 μsec 1.5 μsec	dc-400 kc dc-250 kc	10 500	.2 μsec 1 μsec	dc-2 mc dc-350 kc			
E	35 μv	Useful to 10,000	See E Unit Specifications							
G	200 μv	500	1 μsec	dc-500 kc	10	28 nsec	dc-14 mc	5	22 nsec	dc-16 mc
H	200 μv	5000	1 μsec	dc-500 kc	100	32 nsec	dc-11 mc	50	30 nsec	dc-12 mc
K	200 μv	500	1 μsec	dc-500 kc	10	28 nsec	dc-14 mc	5	22 nsec	dc-16 mc
L	200 μv	500 5000	1 μsec	dc-500 kc 3c-500 kc	10 100	28 nsec 28 nsec	dc-14 mc 3c-14 mc	5 50	22 nsec 22 nsec	dc-16 mc 3c-16 mc
Z	200 μv	500	1 μsec	dc-500 kc	10	35 nsec	dc-10 mc	5	35 nsec	dc-10 mc

*** Performance measured with push-pull output of Type 132 connected to a Type CA Unit in a Type 541 Oscilloscope.**

† System Gain = Overall gain from input of plug-in to the push-pull output cables. If only one output of Type 132 is used, gain is one half that shown. When used with system gain of 500 or higher, dc drift in the input of the plug-in unit may become significant.

Output Polarity

The OUTPUT connections on the front panel of the Type 132 are designated + and —. The output of the +connector has the same polarity as the applied signal while the output of the —connector is inverted.

Gain and Bandwidth

Gain and bandwidth of the Type 132, with a given plug-in unit, depend directly on the load impedance. For high-frequency signals, terminate both OUTPUT connectors with the 93-ohm terminating resistors supplied with the instrument. If you are working with frequencies near the upper limit of the system, it is best to terminate the output coaxial cables at both ends (see Fig. 1-3). Also, if you are using only single-ended output, a cable that is terminated at both ends should be connected to the unused OUTPUT connector; that is, both OUTPUT connectors should always be working into as nearly identical loads as possible.

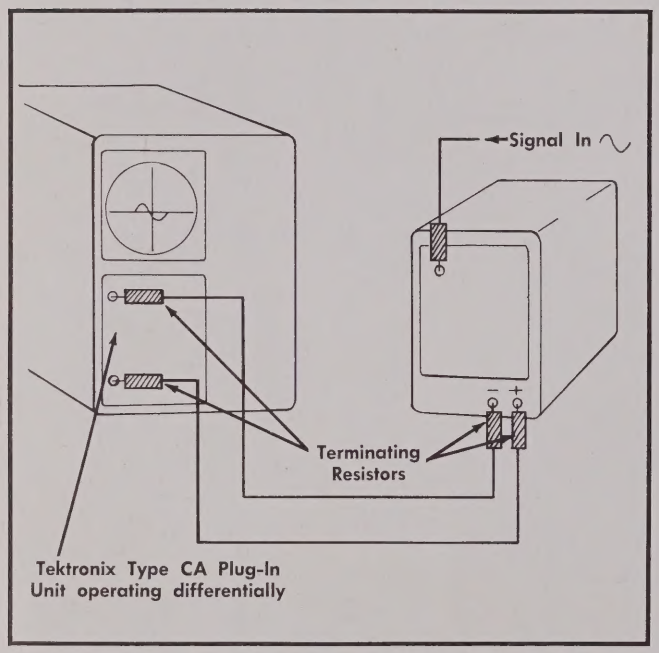

Fig. 1-3. Double terminating the Type 132 output for maximum bandwidth.

For dc and low-frequency signals, maximum gain can be obtained with higher load impedance (such as by loading the output of the Type 132 with the 1-megohm input of an oscilloscope—see Fig. 1-4). Table 1-1 shows gain and bandwidth of the instrument with its OUTPUT connectors double terminated in 93 ohms, terminated in 93 ohms, and unterminated (no load). For more detailed information on bandwidth, risetime, and termination impedance see the Bandwidth/Load Impedance chart and the discussion "Determining System Risetime".

Push-pull gain of the Type 132 is twice that of single-ended gain. Consequently, to obtain maximum gain for a given load impedance, you must utilize the output signals

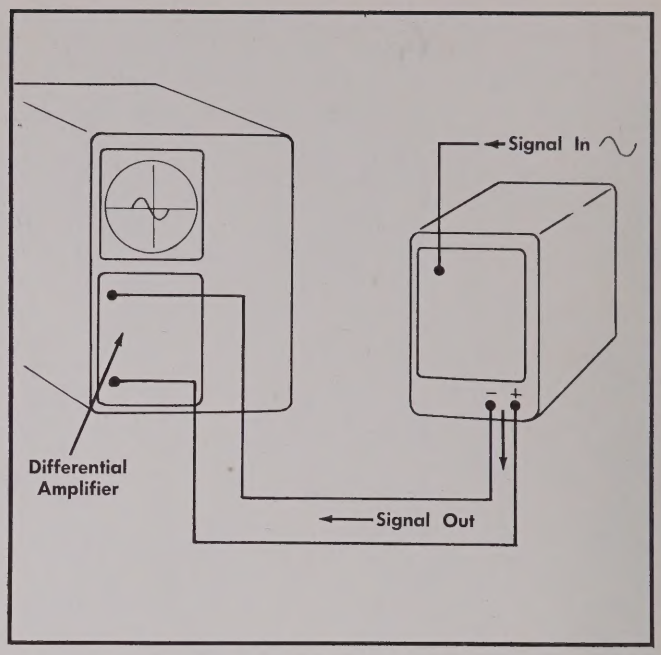

Fig. 1-4. Terminating the Type 132 output with the 1-megohm input of an oscilloscope for maximum gain.

of both OUTPUT connectors. You can do this by connecting the individual outputs to the inputs of a differential amplifier. Fig. 1-4 shows a Type 132/K Unit combination working push-pull into a Tektronix Type G Plug-In Unit (a differential amplifier) as mentioned above.

Gain shown in Table 1-1 applies when the plug-in unit Volts/Cm switch is in the most sensitive position. To determine the push-pull gain for any other Volts/Cm setting, refer to Table 1-2.

TABLE 1-2

GAIN/SENSITIVITY

VOLTS/CM Setting	Gain*	VOLTS/CM Setting	Gain*
50 μvolts/cm	10,000	50 mvolts/cm	10
100 μvolts/cm	5,000	100 mvolts/cm	5
200 μvolts/cm	2,500	200 mvolts/cm	2.5
500 μvolts/cm	1,000	500 mvolts/cm	1
1 mvolts/cm	500	1 volts/cm	0.5
2 mvolts/cm	250	2 volts/cm	0.25
5 mvolts/cm	100	5 volts/cm	0.1
10 mvolts/cm	50	10 volts/cm	0.05
20 mvolts/cm	25	20 volts/cm	0.025

* With the OUTPUT connectors of the Type 132 terminated in 93 ohms.

When selecting the proper Volts/Cm switch setting, be sure the product of the applied signal amplitude and the selected gain does not exceed the maximum voltage swing capabilities of the Type 132. Voltage swing is described in the following paragraph and the Bandwidth/Load Impedance chart.

Output Voltage Swing

The maximum output voltage swing—like other characteristics of the Type 132—depends upon the output impedance. In general, the Type 132 can produce a greater voltage swing when it is lightly loaded (working into a high impedance). As the instrument is more heavily loaded the voltage swing capabilities become more limited.

In determining the voltage swing capabilities of the Type 132, we can assume that its output is a current source that will supply a maximum current swing of ±10 milliamps to an external load and/or the internal plate-load resistance of the output stage. Thus, with an OUTPUT connector terminated in 93 ohms, a current source of ±10 milliamps can produce a voltage swing of about ±1 volt across the 93 ohms. With both OUTPUT connectors working into 93 ohms, the total voltage swing is ±2 volts. Going to the other extreme as an example, if the OUTPUT connectors are unterminated (or terminated in a very high impedance), the ±10 milliamps of available current flows through the 5 kilohm plate-load resistors of the Output Amplifier stage. This would produce a voltage swing of ±50 volts at each OUTPUT connector or a push-pull swing of about ±100 volts.

Positioning

When you use the Type 132/Plug-In Unit with an oscilloscope, it is desirable that you use only the Position control of the oscilloscope for positioning the display. The Position control of the Type 132/Plug-In Unit should be centered. In this way the dc level of the applied signal will be preserved and purely ac signals will have a symmetrical voltage with respect to zero.

Determining System Risetime

Two important factors must be considered in determining the overall risetime of the system in which you are using your Type 132. First, the load impedance will be discussed. The Bandwidth/Load Impedance chart shows the Type 132 frequency response and risetime for external load resistances from 10 Ω to 1 megohm and external capacitive loads of 22 and 47 picofarads.

With no external load, the output stage of the Type 132 is working into a 5-kilohm, 15-picofarad load. The 5 kilohms represents the plate-load resistance of the output stage while the 15 picofarads is the approximate distributed capacity of the stage. Under this condition, the instrument risetime is limited by the output stage with a risetime of about 175 nanoseconds. Under light loading (between no load and about 2 kilohms) the approximate risetime can be computed as follows:

$$T_r = 2.2\ R\ (C + 15)\ 10^{-12}$$

where: T_r = the risetime of the output stage. (Under light loading this risetime may be considered as the overall risetime of the instrument.)

R = the effective parallel resistance of the 5-kilohm plate resistance and the external load resistance, in ohms.

C = the external load capacitance, in picofarads.

As the output of the Type 132 is more heavily loaded, effective R decreases since the load is in parallel with the plate-load resistance of the stage. In comparing this with the formula, it can be seen that a decrease in R decreases the risetime and thus extends the upper-frequency response of the circuit. The capacitance, however, will be increased to a given amount by loading and tends to increase the risetime. For this reason, capacitive loading on the instrument should be kept to a minimum.

As the risetime of the output stage decreases due to heavier resistive loading, the risetime of the preceding stages and plug-in unit will have a more significant effect on overall risetime. This effect will become appreciable with external load resistance below about 2 kilohms. To take this into consideration in your calculations, refer to the formula:

$$T_r = \sqrt{(2.2\ RC \times 10^{-12})^2 + T_{ro}^2}$$

where: T_r = risetime of the Type 132/Plug-In Unit.

R = effective parallel resistance of the load resistance and 5 kilohm plate-load resistor in ohms.

C = external load capacitance in picofarads plus 15 pf internal stray capacitance.

T_{ro} = maximum risetime of the Type 132/Plug-In Unit shown in Table 1-1.

NOTE

The risetime of an instrument is inversely proportional to its bandwidth. The approximate upper 3-db frequency corresponding to a known risetime may be computed as follows:

$$f = \frac{.35}{T_r}$$

where: f = the upper 3-db frequency.

T_r = the applicable risetime.

The second factor affecting overall system risetime/bandwidth is the other instruments connected to the Type 132/Plug-In Unit. If the risetimes of the other instruments are known, the overall risetime may be computed as follows:

$$T_{rt} = \sqrt{T_r^2 + T_{r1}^2 + T_{r2}^2 \ldots\ldots\ldots\ldots + T_{rn}^2}$$

where: T_{rt} = overall risetime.

T_r = risetime of Type 132/Plug-In Unit.

T_{r1}, T_{r2}, and T_{rn} = risetime of other instruments.

This discussion does not consider possible deterioration of system risetime due to lossy cables connecting between instruments.

Multi-Trace Operation

By using a Tektronix multi-trace plug-in unit with the Type 132, it is possible to display more than one signal simultaneously on a conventional single-trace oscilloscope. Also, in the Alternate Mode of operation, the Type 132 can be used with a recorder for multiple-channel recording.

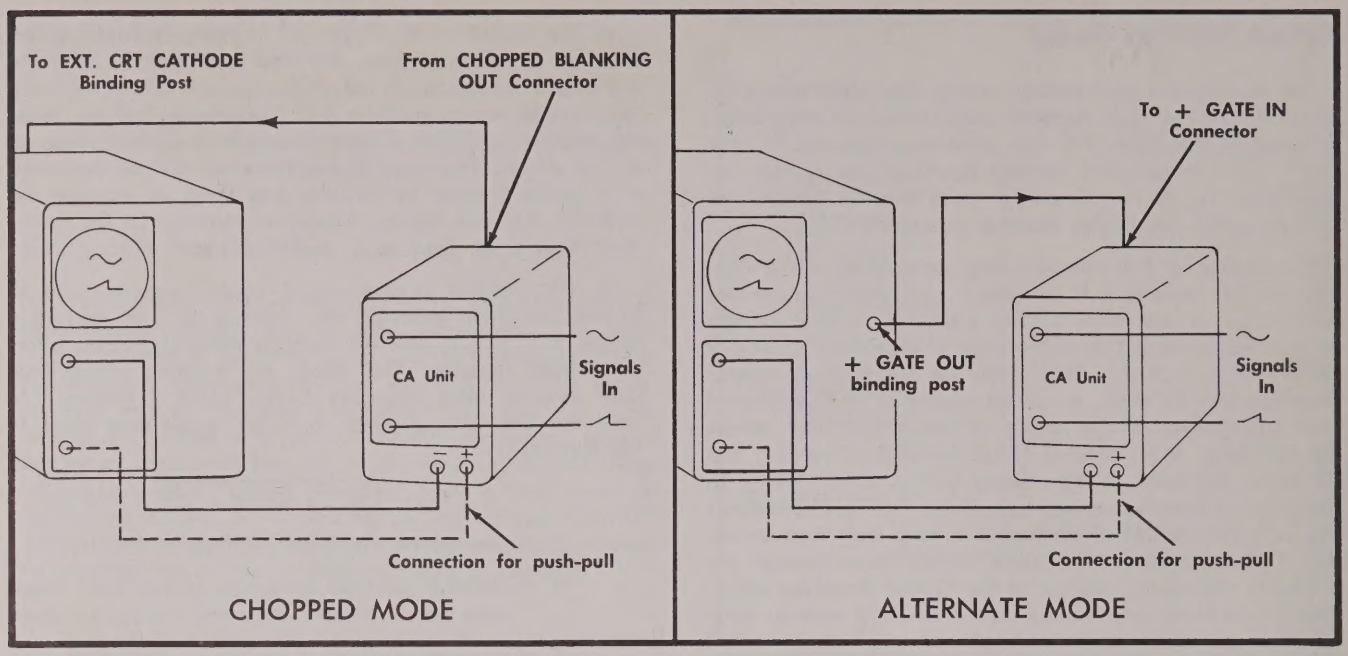

Fig. 1-5. Type 132 connections for multi-trace operation.

To operate the multi-trace plug-in unit in the Chopped Mode, connect between the CHOPPED BLANKING OUT connector on the rear panel of the Type 132 and the External Crt Cathode binding posts on the oscilloscope (see Fig. 1-5). Place the Crt Cathode Selector switch of the oscilloscope in the External Crt Cathode position. This will blank out the unwanted switching transients of the multi-trace plug-in unit.

To operate a multi-trace plug-in unit in the Alternate Mode, connect between the +GATE IN connector on the rear of the Type 132 and the oscilloscope +GATE OUT connector (see Fig. 1-5). The oscilloscope gating pulse is used to trigger the switching circuit of the multi-trace plug-in unit at the end of each sweep.

In either multi-trace mode of operation, the ALT.-CHOP. switch on the rear panel of the Type 132 must be in the appropriate position. Best general results will be obtained if the oscilloscope is externally triggered when you use the multi-trace feature. (See the instruction manual of the multi-trace plug-in unit for more information regarding multi-trace displays.)

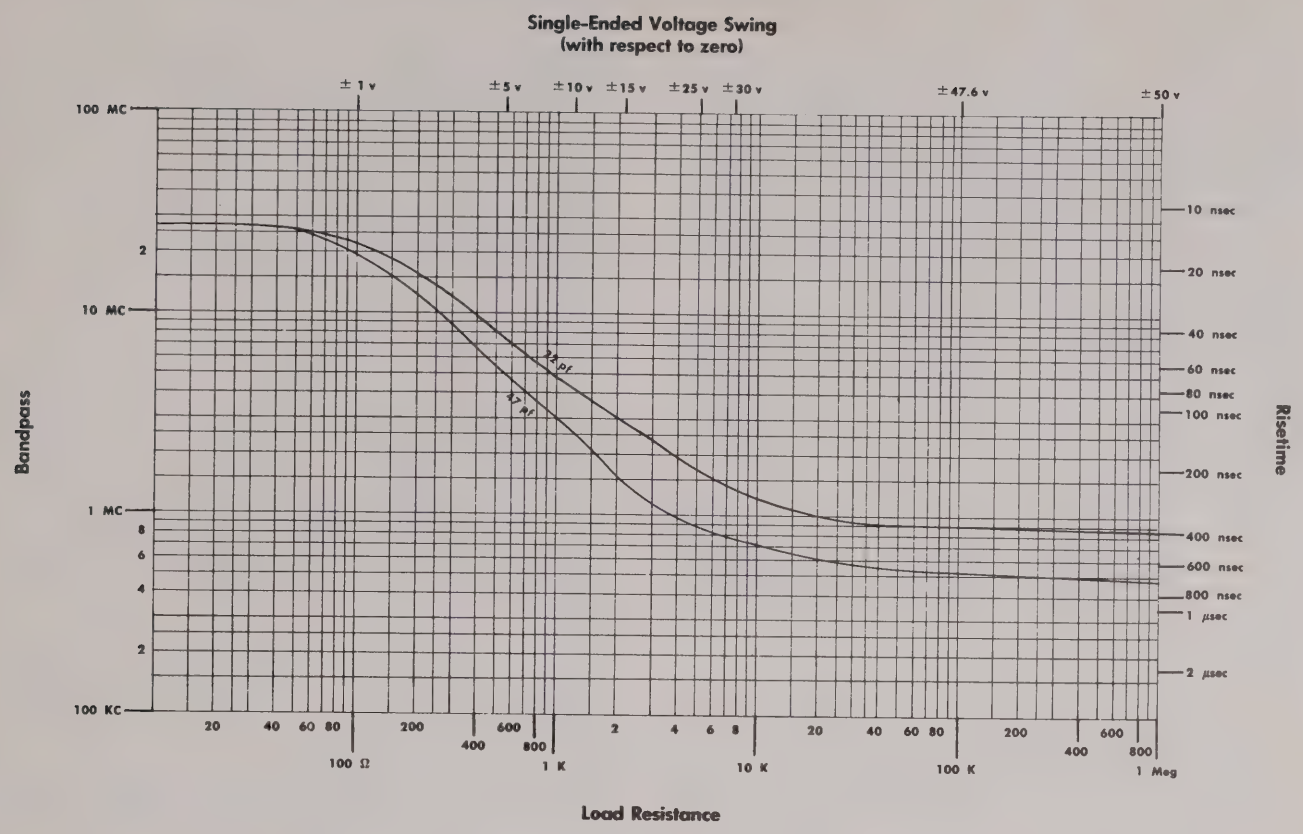

Bandpass, load resistance, risetime, and maximum voltage swing with external load capacitances of 22 pf and 47 pf. Data is approximate and does not include effects of plug-in unit or measuring system.

SECTION 2
CIRCUIT DESCRIPTION

General

The Type 132 contains a two-stage amplifier, a multi-trace synchronizing and blanking circuit, and a power supply. The Type 132 amplifier receives the signal from the plug-in unit and applies an amplified reproduction of the signal to the OUTPUT connectors on the front panel. Risetime of the amplifier is about 20 nanoseconds when the output amplifier stage is terminated in 93 ohms.

The multi-trace synchronizing and blanking circuit provides either blanking pulses to an oscilloscope for Chopped multi-trace operation or synchronizing pulses to the multi-trace switching circuit for Alternate multi-trace operation. This provides independent operation of a multi-trace plug-in unit in either multi-trace mode of operation.

The power supply of the Type 132 provides all the voltages required by the instrument and any of its plug-in units. The dc voltages provided by the power supply are voltage regulated against changes in load or line-voltage fluctuations.

Amplifier

The amplifier of the Type 132 is a two-stage wide-band push-pull amplifier with a frequency response of dc to 20 megacycles. Overall gain of the amplifier is determined by the plate-load impedance of the output stage and the setting of the GAIN ADJ.

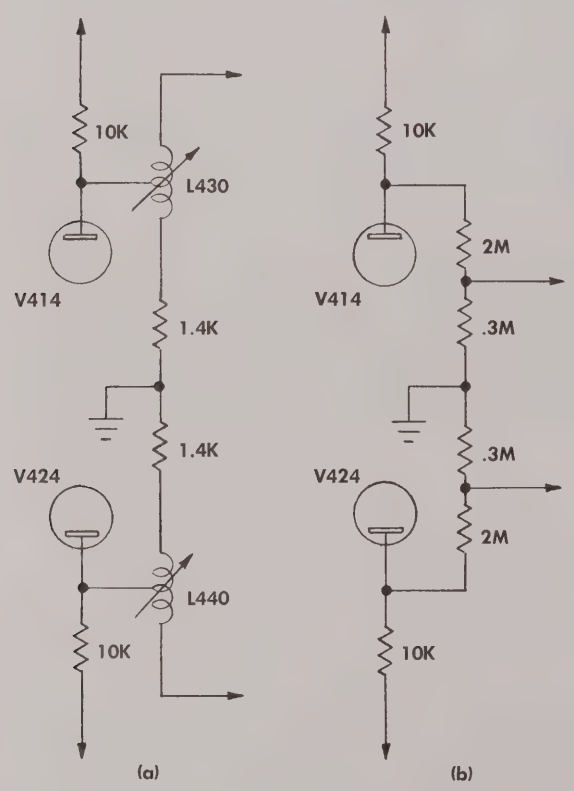

Fig. 2-1. Approximate equivalent circuits of the compensation network at high (a) and low (b) frequencies.

The frequency compensation network between the Input Amplifier stage and the cathode followers gives the instrument a flat frequency response over a wide range. Fig. 2-1 shows the equivalent circuits of the network at dc and high frequencies. The inductors, L430 and L440, are high-frequency peaking coils that improve the response of the amplifier at the high-frequency end of its bandpass.

C446 (HF COMP.) and variable resistor R436 (LF COMP.) are adjusted for the proper time constant at the crossover frequency. Their effect is most apparent at low and intermediate frequencies.

Gain of the Output Amplifier stage and, thus, overall gain of the instrument is controlled by R475 (GAIN ADJ.). R475 controls the amount of cathode degeneration in the stage by varying the resistive coupling between the common cathodes.

The diode arrangement in the cathode circuit of the Output Amplifier increases the gain of the stage when it is operating near the end of its dynamic range. This improves the linearity of the stage.

The plates of the Output Amplifier are connected directly to the OUTPUT connectors. Thus, the plate-load impedance of the amplifier is determined by external loading.

The variable resistor R462 (DC LEVEL) provides a means of setting the plate voltages of the Output Amplifier to zero when the Position control of the plug-in unit is at midrange and no signal is applied.

Multi-Trace Sync and Blanking Circuit

This circuit is in use whenever the multi-trace feature of a multi-trace type plug-in unit is used.

In the Alternate Mode of multi-trace operation, the circuit couples a sync pulse to the switching circuit of the multi-trace plug-in unit. When you are using the Type 132 with an oscilloscope, the oscilloscope +Gate Out is used as the sync pulse source. In this case you must connect between the oscilloscope +Gate Out connector and the +GATE IN connector on the Type 132 rear panel. The gating pulse is applied to the grid of V924A via C920 and the ALT.-CHOP. switch. The negative-going portion of the gating pulse cuts off V924A momentarily and produces a positive-going pulse at the grid of V924B. With the ALT.-CHOP. switch in the ALT. position. V924B is connected in series with the triggering circuit in the multi-trace plug-in unit through pin 16 of the Interconnecting Socket. Consequently, the positive-going pulse at the grid of V924B produces a negative-going pulse at the plate which triggers the switching circuit of the multi-trace plug-in unit at the end of each sweep.

In the Chopped Mode of multi-trace operation, the circuit provides a blanking pulse to the crt circuit of the oscilloscope. A connection must be made from the CHOPPED

BLANKING OUT connector on the rear panel of the Type 132 to the Crt Cathode binding post on the rear of the oscilloscope. With the ALT.-CHOP. switch in the CHOP. position, a pulse from the multi-trace plug-in is applied to the control grid of V924A through pin 16 and the ALT.-CHOP. switch. The pulse is coupled through V924 and the CHOPPED BLANKING OUT connector to the crt cathode circuit in the oscilloscope. This cuts off the crt beam momentarily each time the switching circuit of the plug-in unit changes states. This, in turn, blanks out the switching transients that would normally be observed as the plug-in switched from one channel to the other.

Power Supplies

Plate and filament voltage for the Type 132 and any of its plug-in units is furnished by a single transformer, T601. The two primary windings are connected in parallel for 117-volt operation or in series for 234-volt operation.

The three main full-wave power supplies furnish regulated dc voltages of —150, +100, +225, and +350 volts.

The —150-volt supply provides a stable reference voltage for the other regulated supplies. The basic reference voltage for the —150-volt supply is provided by V619, a voltage regulator tube that maintains a constant voltage across its terminals. The constant voltage across V619 is applied to one grid of a difference amplifier, V624. The other grid of the difference amplifier is connected to the voltage divider network of R632, R634, and R636. Adjustment of R634 (—150 VOLTS) determines the percentage of the total output voltage that appears at the grid of V624A. The voltage on the grid of V624A determines the plate voltage of V624B and thus the grid voltage of V627. V627 is in series with the load and the voltage drop across it determines the voltage across the load. With the —150 VOLTS adjustment properly set, the voltage drop across V627 and the shunting resistor R627 is such that the remaining voltage (voltage across the load) is 150 volts.

Should loading on the supply tend to lower its output voltage, the potential at the grid of V624A will change in proportion and cause an inverse (more positive in this case) change at the plate of V624B. A more positive potential at the plate of V624B, and hence the grid of V627, causes V627 to decrease in effective resistance. A decrease in the effective resistance of V627 results in less voltage dropped across it and causes a corrective increase in the voltage across the load. C636 increases the ac response of the circuit and thus improves the regulating ability of the circuit to fast changes, such as 120-cycle ripple.

As mentioned previously, the —150-volt supply serves as a reference for the other regulated supplies. In the +100-volt supply, the voltage divider R658-R659 establishes a voltage of essentially zero at the grid of the amplifier, V654A. (The actual voltage at this grid will be a few volts negative.) Should loading on the supply tend to lower its output voltage, an error voltage will appear at the grid of the amplifier. The error voltage will be amplified and appear at the grids of the series regulator tube, V667. The cathodes of V667 will follow the grids and thus the output voltage will be returned to its nominal value of +100 volts. C658 improves the response of the regulator circuit to sudden changes in output voltage.

A sample of the +100-volt output appears at the screen of V654A. This improves the response of the regulator circuit to variations in line and output voltage.

In addition to supplying plate voltage, the +100-volt supply furnishes regulated dc heater voltages to the heaters of V687, V697, and some of the tubes in the plug-in units.

The +350- and +225-volt supplies operate similar to the +100-volt supply. The rectifier circuit for the two supplies is elevated about 200 volts. V697A and V687 are series regulator tubes and V654B and V697B are error-voltage amplifiers. In addition, a sample of the unregulated voltage of the 350-volt supply is coupled to the screen of V697B. This decreases 120-cycle ripple content in the +350-volt supply, and improves the regulation of the circuit for line-voltage variations.

SECTION 3
MAINTENANCE AND CALIBRATION

This section of the manual contains general maintenance information, troubleshooting instructions, and calibration procedures. All the information is intended to help you obtain optimum service from your Type 132.

Preventive Maintenance

Periodically you should visually inspect the inside of the instrument for possible trouble sources. Excessive dust accumulation, parts clearances, and metallic foreign material can lead to electrical failure. The instrument should be wiped free of any dirt accumulation with a soft lint-free cloth each time a side panel or bottom plate is removed.

The air filter on the rear of the instrument will minimize dirt accumulation in the instrument. However, if the filter gets excessively dirty, instrument cooling will be hampered. If this happens the instrument will overheat and component life in the instrument may be impaired. To clean the filter, remove it from the instrument and run hot water through it from the inside out. Or, if the filter is exceptionally dirty, you may wash it in hot soapy water. Be sure that you rinse the filter thoroughly after it is clean. When new, the filter is coated with an adhesive, which greatly increases its filtering ability. When the filter is cleaned the adhesive material is removed and must be replaced. Filter adhesives can usually be purchased locally from air conditioning suppliers.

The bearing in the fan motor is a sintered bronze oilite bearing and requires no oiling.

Removal and Replacement of Parts

Procedures required for replacement of most parts in the Type 132 are obvious. Detailed instructions for their removal are therefore not required. Other parts, however, can best be removed if a definite procedure is followed. Instructions for the removal of some of these parts are contained in the following paragraphs. Parts-ordering information is included in the parts list at the rear of the manual.

Removal of Side Panels

To remove the side panels from the Type 132, loosen the two screw-head fasteners at the top of each panel and pull the upper portion of the panel outward. When replacing the panels, hook them over the bottom rails before pushing the upper portion into place. Also, when replacing the side panels, place the perforations toward the front of the instrument.

WARNING

Remove the power cord from the instrument before you remove or replace any of the internal components.

Removal of Ceramic Strips

To remove a ceramic terminal strip, unsolder all components and connections, then pry the strip, with yokes attached, out of the chassis. An alternative method is to use diagonal cutters to cut off one side of each yoke to free the strip (use care not to damage the spacer). After removing the strip, the remainder of each yoke can be easily extracted from the chassis with a pair of pliers. The yokes need not be salvaged since new ones are furnished with the new strips. However, the spacers may be reused and you may not need to order new ones. When ordering strips, specify the correct height, the number of notches required, and correct spacer size.

To install a new strip, place the spacers in the chassis holes, insert the yoke pins through the spacers, and press down on the top of the strip to seat the yokes. Use a plastic or hard-rubber mallet, if necessary, to seat the yokes firmly. If desired, the extending portion of the yoke pins may be cut off to within about an eighth of an inch of the lower end of the spacers.

Be sure to observe the soldering precautions described in the next paragraph when resoldering connections to the strip.

Soldering Precautions

In the production of Tektronix instruments, we use a special silver-bearing solder to establish a bond to the ceramic terminal strips. This bond can be broken by the repeated use of ordinary tin-lead solder, or by the application of too much heat. For this reason, we recommend the use of a wedge-shaped soldering-iron tip and solder containing about 3% silver for making or removing connections from the ceramic strips. This solder is locally available in most areas, or it may be purchased directly from Tektronix in one-pound rolls (order by part number 251-514). Occasional use of ordinary solder will not break the bond if too much heat is not applied.

TROUBLESHOOTING

If trouble occurs in the instrument, first check and eliminate the plug-in unit as the possible cause of trouble. You can best do this by substituting for the plug-in with one that is known to be in good working order. After you have eliminated the plug-in unit as a possible cause, check the calibration of the Type 132—particularly the power-supply voltages. In many cases, improper calibration will be observed as an apparent trouble.

When it has been determined that trouble definitely exists in the Type 132, perform a complete visual inspection of the instrument. Troubles such as loose wires, heat-damaged components, and improperly seated tubes can often be found by visual inspection. If you encounter a burnt component, find and eliminate the cause before replacing the component.

Faulty tubes are the most prevalent cause of circuit failure. Therefore, if a visual check is unsuccessful, check the tubes in the suspected circuit. Check the tubes by substitution rather than with a tube-tester; tube-testers often will not indicate the suitability of a tube to perform a given function in a circuit. Be sure that you return the good tubes to their original sockets—otherwise you may have to unnecessarily recalibrate the instrument because of different tube characteristics.

NOTE

All voltages referred to in this section were measured with a 20,000 ohms per volt meter.

Troubleshooting the Power Supply

If there is no power present anywhere in the instrument (power-supply outputs, tube filaments, etc.), check the primary circuit of T601. Check especially the fuse, thermal cutout switch, POWER ON switch, and the power source. If all of these are satisfactory, check the primary of T601 for continuity. If the pilot light or any of the tube filaments are lighted, you may assume that the primary circuit of T601 is operating correctly.

If one or more of the supplies fails to regulate, check the line voltage. It should be between 105 and 125 volts rms for an instrument wired for 117-volt operation, or between 210 and 250 volts rms for an instrument wired for 234-volt operation. If not, change the wiring on the line transformer as shown in Fig. 1-2 or bring the power source within the nominal limits.

If the line voltage is within the specified limits, and one of the power-supply voltages is not correct, check that particular regulator circuit. If none of the supply voltages are correct, the trouble is probably in the —150-volt supply, since this supply serves as a reference for the other supplies.

To check a regulator circuit, first replace the tubes as described previously. If this does not eliminate the trouble, check the rest of the circuit by voltage and resistance measurements. (See the circuit diagrams for typical voltages.)

If there is excessive ripple on any of the supplies, check the filter capacitor or capacitors (C612, C642, C667, or C672).

Troubleshooting the Amplifier

A faulty component in the Type 132 Amplifier circuit will usually cause insufficient output at one or both OUTPUT connectors. If the faulty component is common to both sides of the push-pull circuit (such as the common cathode resistor R415), insufficient amplitude will be noted at both OUTPUT connectors, in about an equal amount. If the faulty component is not common to both sides of the push-pull circuit (such as one of the plate-load resistors), insufficient amplitude will be noted most significantly at one OUTPUT connector. The following instructions describe the troubleshooting procedure for either of these conditions.

The voltage checks given in the following steps are at key points in the circuit that will allow you to isolate a trouble to a given stage. Once you isolate the faulty stage, perform voltage and resistance checks throughout the stage to find the faulty component. Before proceeding, insert a plug-in unit into the Type 132 (with no signal applied) and allow both instruments to warm up.

1. Measure the voltage between pin 1 of V414 and pin 1 of V424. Vary the Position control of the plug-in unit throughout its range and note the amount of voltage change on the voltmeter. The voltage should vary about 2 volts. If the voltage does not change by this amount, the trouble is in the plug-in unit, R410, R420, or the interconnecting plug.

2. Measure the voltages between pin 5 of V414 and ground and between pin 5 of V424 and ground. At each point, vary the Position control of the plug-in unit and note the amount of voltage change. Both voltages should vary about 70 volts. If the voltages do not change by this amount, the faulty component is in the V414-V424 stage.

3. Measure the voltages between ground and pins 2 and 7 of V453. At each point, vary the Position control of the plug-in unit and note the amount of voltage change. Both voltages should vary about 10 volts. If the voltages do not change by this amount, the faulty component is in the interstage coupling network.

4. Measure the voltages between ground and pins 3 and 8 of V453. At each point, vary the Position control of the plug-in unit and note the amount of voltage change. Both voltages should vary about 10 volts. If the voltages do not change by this amount, the faulty component is in the V453 stage.

5. Measure the voltages between pin 6 of V464 and ground and between pin 6 of V474 and ground. At each point, vary the Position control of the plug-in unit throughout its range and note the amount of voltage change. Both voltages should vary about 150 volts. If the voltages do not change by this amount, the faulty component is in the V464-V474 stage.

CALIBRATION PROCEDURE

The Type 132 Plug-In Unit Power Supply is a stable instrument and should not require calibration more often than every six months, or after each 500 hours of operation, whichever is sooner.

This procedure is arranged in the proper sequence for a complete calibration of the instrument. If desired, you may perform any of the adjustments individually or out of sequence as long as you complete a given adjustment or any references made in that step.

Various operational checks are described throughout the calibration procedures. These checks assure that your instrument is satisfactorily performing the various functions that may not be apparent during its normal use. If desired, you may neglect these portions of the procedure as they do not affect the instrument calibration.

Figs. 3-1 and 3-2 show the location of all the internal adjustments and test points referred to in this portion of the manual.

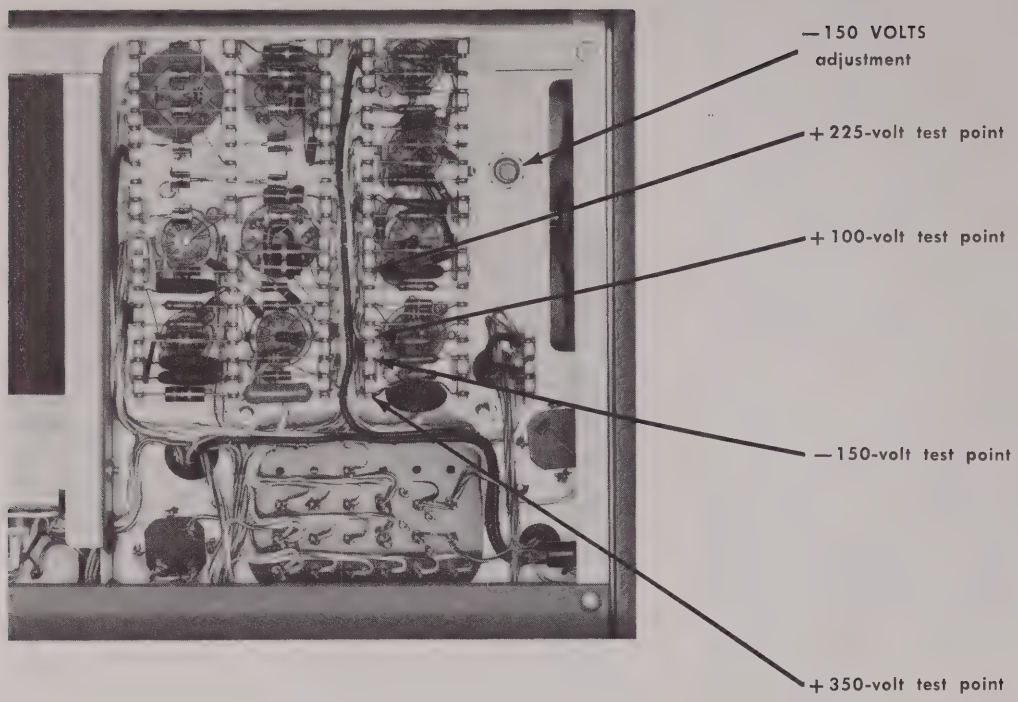

Fig. 3-1. Type 132—right-side view showing —150 VOLTS adjustment and power supply check points.

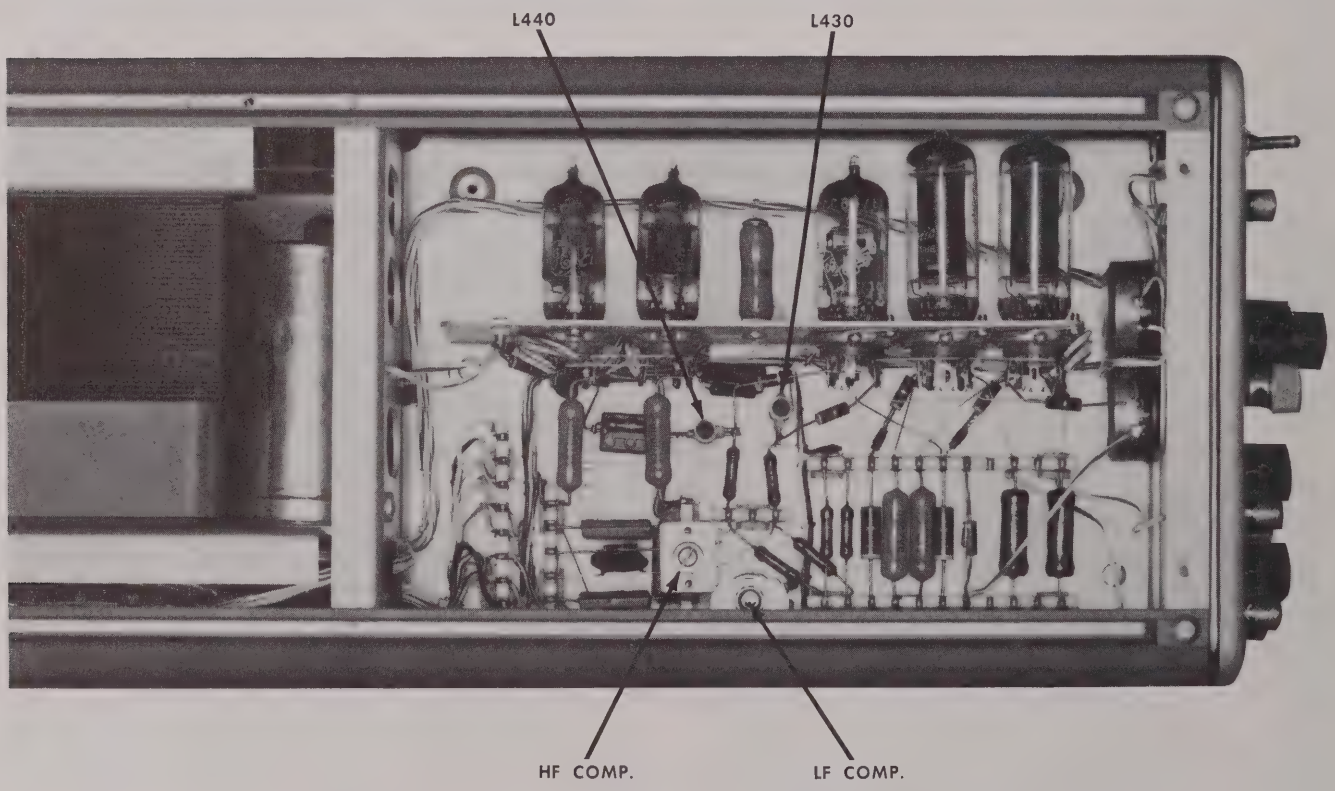

Fig. 3-2. Type 132—bottom view showing internal adjustments.

Equipment Required

The following equipment is required for a complete calibration of the Type 132:

1. Test oscilloscope with a risetime of 12 nanoseconds or less, a sweep rate of 0.1 microsecond per division, and a vertical sensitivity of 0.05 volt per division. (Tektronix Type 540, 550, or 580-series recommended with a Type K, L or B Plug-In Unit, and a 10X probe with a 42" cable.)

2. Square-wave generator with a risetime of 1 microsecond or less, frequency outputs of 250 cps and 10-25 kc, and an output amplitude variable from zero to about 2 volts, peak-to-peak. (Tektronix Type 105 Square-Wave Generator recommended with two Type B52-T10 attenuators.)

3. Square-wave generator with a risetime of 3 nanoseconds or less, a frequency output of about 700 kc, and an output amplitude of about 0.1 volt, peak-to-peak. (Tektronix Type 107 Square-Wave Generator recommended.)

4. Two 93-ohm coaxial cables and four matching termination resistors. (Tektronix Type P93 coaxial cables recommended with Type B93R terminating resistors.)

5. One 52-ohm coaxial cable with matching termination resistor. (Tektronix Type P52 coaxial cable recommended with a Type B52R terminating resistor.)

6. Tektronix Type K Plug-In Unit (for insertion into the Type 132).

7. Dc voltmeter with a sensitivity of at least 5,000 ohms per volt, calibrated to an accuracy of 1%.

8. Gain Adj. Adapter. Fits between plug-in and Type 132: Tektronix part number 013-005.

9. Low-capacitance calibration tool: Tektronix part number 003-301 or equivalent.

The preceding equipment is required for setting the internal calibration adjustments of the Type 132. The following additional equipment is required if you wish to perform the various operational checks that are described in the calibration procedure.

1. Variable autotransformer with an output voltage of 105 to 125 volts (if your instrument is wired for 117-volt operation) or 210 to 250 volts (for 234-volt operation) and wattage rating of at least 225 watts. In addition, there must be a means of monitoring the output voltage of the transformer so that it may be accurately set at the desired voltages.

2. Tektronix Type L or B (high-sensitivity) Plug-In Unit.

3. 1X attenuator probe with a 42" cable length. (Tektronix Type P6001, P6004, P6027 or P6028 recommended.)

4. Tektronix Type CA Plug-In Unit.

Preliminary Setup

Connect the power cord of the Type 132 to the power source and turn on the power switch of the Type 132. (If you have a variable autotransformer as described in "Equipment Required" connect its output to the Type 132 and set its output voltage at 117 volts or 234 volts, as applicable. Insert the Type K Plug-In Unit into the Type 132 and allow both instruments to warm up for at least 2 minutes.

—150 VOLTS Adjustment. Connect the dc voltmeter between ground and the —150-volt test point shown in Fig. 3-1 and adjust the —150 VOLTS adjustment for exactly 150 volts.

Power Supply Operational Checks. Connect the dc voltmeter between ground and the +100-, +225-, and +350-volt test points shown in Fig. 3-1. The voltage at each point should be within 3% of its nominal voltage.

Set the output voltage of the autotransformer for 105 volts (210 volts if your instrument is wired for 234-volt operation). Connect the dc voltmeter between ground and the —150-, +100-, and +225-, and +350-volt test points. All voltages should be within 3% of their nominal values.

Connect the 1X probe from the test oscilloscope to each of the voltage test points shown in Fig. 3-1 and vary the autotransformer output voltage from 105 to 125 volts (210 to 250 if your instrument is wired for 234 volts). The peak-to-peak ripple voltage on any of the supplies should not exceed 20 millivolts. To make the foregoing measurements, set up the test oscilloscope as follows:

1. Insert the Type L or B Plug-In Unit into the test oscilloscope, turn on the power and allow it to warm up.

2. Set the AC-DC switch of the plug-in unit to AC (if you are using a Type L Plug-In Unit, set the switch to AC X10 GAIN).

3. Connect the coaxial connector of the 1X probe to the plug-in unit and set the VOLTS/CM switch of the plug-in unit to .005.

4. Set the triggering controls of the oscilloscope for AUTO and + or — LINE. Set the TIME/CM switch to 5 mSEC.

5. Connect the 1X probe to the power supply test points and vary the line voltage as described above.

6. Measure the amount of vertical deflection on the test oscilloscope. It should not exceed 3 centimeters (15 millivolts).

7. Return the line voltage to 117 volts.

GAIN ADJ.

To set the GAIN ADJ. control, proceed as follows:

1. Remove the plug-in and insert the Gain Adj. Adapter between the plug-in and the Type 132. Reinsert the plug-in, turn on the power and allow the unit to warm up several minutes before proceeding.

NOTE

A TU-2 or Type 1M1 (TU-7) test unit can be used for this adjustment if a Gain Adj. Adapter is not available. A standard amplifier plug-in unit can be used if it is checked for correct gain in a calibrated oscilloscope.

2. Apply a 0.1-volt peak-to-peak calibrator signal from an oscilloscope to the input jack of the Gain Adj. Adapter.

3. Terminate both OUTPUT connectors of the Type 132 with 93-ohm terminations.

4. Monitor the output voltage of the Type 132 with a test oscilloscope and set the GAIN ADJ. for a single-ended output of 0.25 volt, peak-to-peak, or a push-pull output of 0.5 volt, peak-to-peak. (Using a plug-in unit instead of the Gain Adj. Adapter, set the GAIN ADJ. for an output of 0.5 volt, peak-to-peak, single-ended or 1 volt, peak-to-peak, push-pull.)

5. Remove the Gain Adj. Adapter and reinsert the plug-in into the Type 132.

DC LEVEL Adjustment

Set the DC LEVEL control as follows:

1. Allow the Type 132 and plug-in to warm up for several minutes before continuing with this adjustment.

2. Connect a 93-ohm termination to both OUTPUT connectors of the Type 132.

3. Monitor the voltage between the two OUTPUT connectors and set the Position control of the plug-in unit for zero volts (see Fig. 3-3). Do not change the setting of the Position control after it has been set.

4. Monitor the voltage between either OUTPUT connector and ground. Adjust the DC LEVEL control for zero volts.

LF and HF COMP. Adjustments. Proper adjustment of the LF COMP. and the HF COMP. assures the Type 132 of a flat frequency response over the low and intermediate frequency range. Adjustment of the LF COMP. affects frequencies below about 1 kc while the HF COMP. affects frequencies above about 1 kc. Their effect is most apparent when the Type 132 amplifies a square wave of the appropriate frequency. Both adjustments interact to some degree and are therefore handled together.

To properly set the LF COMP. and HF COMP. adjustments, proceed as follows:

1. Apply a 10- to 25-kc square wave from the Square-Wave Generator to the Input connector of the Type K Unit inserted into the Type 132. (Note: Connect the output of the square-wave generator to the Type 132/K Unit through two 10:1 attenuators and a coaxial cable terminated in its characteristic impedance.)

2. Set the VOLTS/CM switch of the Type 132/K Unit to .05.

3. Set the VOLTS/CM switch of the test oscilloscope to .1.

4. Connect a 93 Ω coaxial cable terminated in a 93 Ω terminating resistor between the +OUTPUT connector of the Type 132 and the Input connector of the test oscilloscope.

5. Set the triggering controls of the test oscilloscope for a stable display of several cycles.

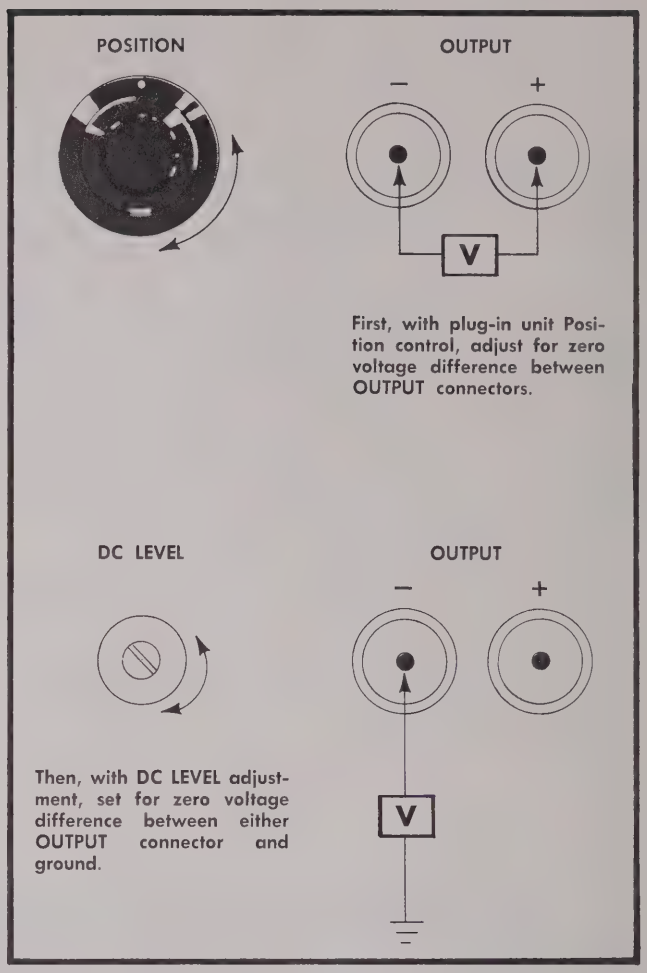

Fig. 3-3. DC LEVEL adjustment.

6. Adjust the output amplitude of the square-wave generator for about 3 centimeters of vertical deflection on the screen of the test oscilloscope.

7. Adjust the HF COMP. for the best level-topped square-wave appearance as displayed on the test oscilloscope (see Fig. 3-4).

8. Decrease the frequency of the square-wave generator to 250 cps and readjust the triggering controls of test oscilloscope for a stable display of several cycles.

9. Adjust the LF COMP. for the best level-topped square-wave appearance as displayed on the test oscilloscope (see Fig. 3-5).

10. Set the output frequency of the square-wave generator to 10 kc or 25 kc and repeat steps 7, 8, and 9.

11. Disconnect all signal connections from the Type 132/K Unit.

High-Frequency Peaking Adjustments. Proper adjustment of the high-frequency peaking coils assures the Type 132 Amplifier of fastest risetime with negligible overshoot.

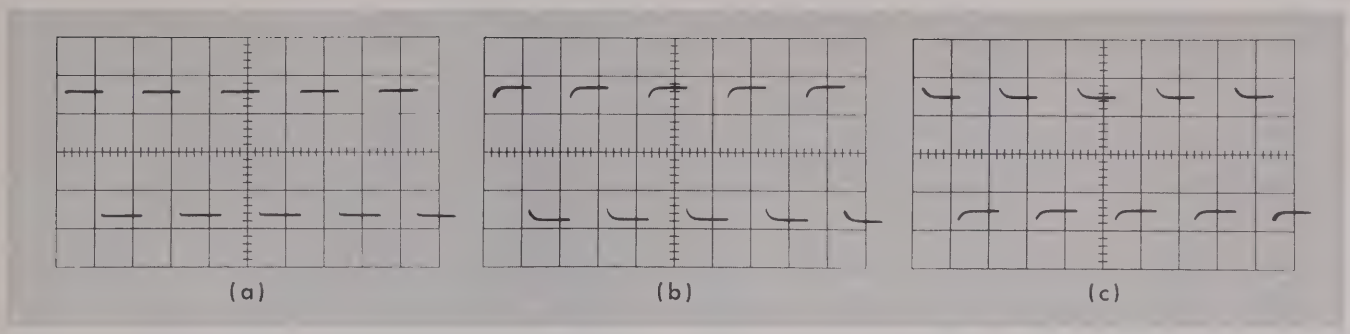

Fig. 3-4. Waveforms showing effect of HF COMP. adjustment. (a) Display with HF COMP. properly adjusted; (b) and (c) HF COMP. improperly adjusted.

To properly set the high-frequency peaking coils, proceed as follows:

1. Apply a 0.05-volt 400-kc square wave to the Type 132/K Unit Input connector from the square-wave generator. (Note: Connect the output of the square-wave generator to the Type 132/K Unit through a 52-ohm coaxial cable and a 52-ohm 10:1 "T" attenuator—see Fig. 3-6. Also, If you are using a Tektronix Type 107 Square-Wave Generator, set its frequency control for about 100 kc and amplitude control for about 0.1 volt.)

2. Connect a 93-ohm terminating resistor to each OUTPUT connector of the Type 132.

3. Connect a 93-ohm coaxial cable to each of the terminating resistors that are connected to the Type 132.

4. Connect a 93-ohm terminating resistor to the unterminated end of each coaxial cable that is connected to the Type 132.

5. Set the VOLTS/CM switch of the Type 132/K Unit to .05 and the AC-DC switch to DC.

6. Connect the 93-ohm terminating resistor (the terminating resistor from the +OUTPUT connector) to the oscilloscope input connector.

7. Set the sensitivity of the test oscilloscope for about 3 centimeters of vertical deflection and set its time-base controls as follows:

Sweep rate: 0.1 microsecond per centimeter
Triggering slope: +INTERNAL
Triggering mode: AC LF REJECT or AC FAST
Stability and triggering level: adjust for stable display

8. Adjust L430 and L440 for the fastest rising square wave without appreciable overshoot and ringing, as displayed on the test oscilloscope. (See Fig. 3-7.)

9. Disconnect the terminating resistor from the oscilloscope input and connect the terminating resistor from the —OUTPUT connector to the oscilloscope input.

10. Repeat steps 6 through 9 until the outputs of both OUTPUT connectors are as nearly identical as possible and have as fast a rise as possible without appreciable overshoot and ringing.

Multi-Trace Sync. and Chopped Blanking Operational Check. Insert a Tektronix Type CA Plug-In Unit into the Type 132. Set the MODE switch of the Type CA Unit to Alternate. Set the ALT.-CHOP. switch on the rear panel of the Type 132 to ALT. Connect between the test oscilloscope +Gate Out connector and the +GATE IN connector on the rear of the Type 132. Connect between the

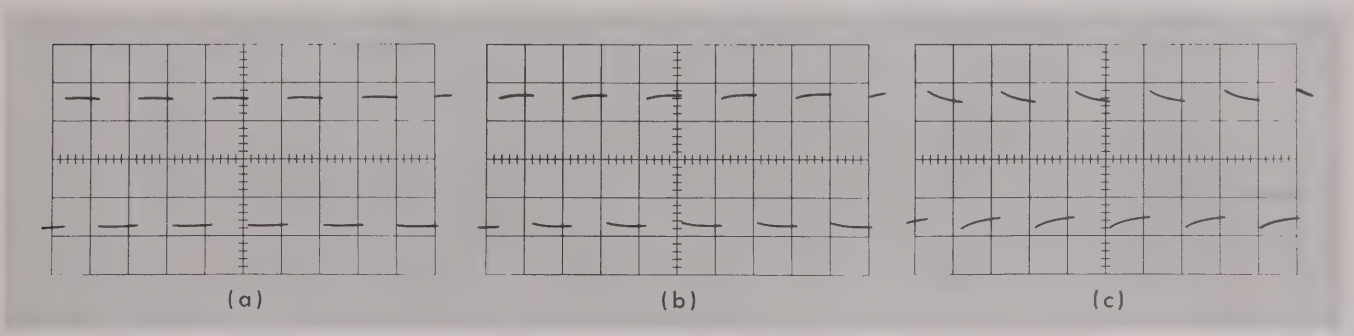

Fig. 3-5. Waveforms showing effect of LF COMP. adjustment. (a) Display with LF COMP. properly adjusted; (b) and (c) LF COMP. improperly adjusted.

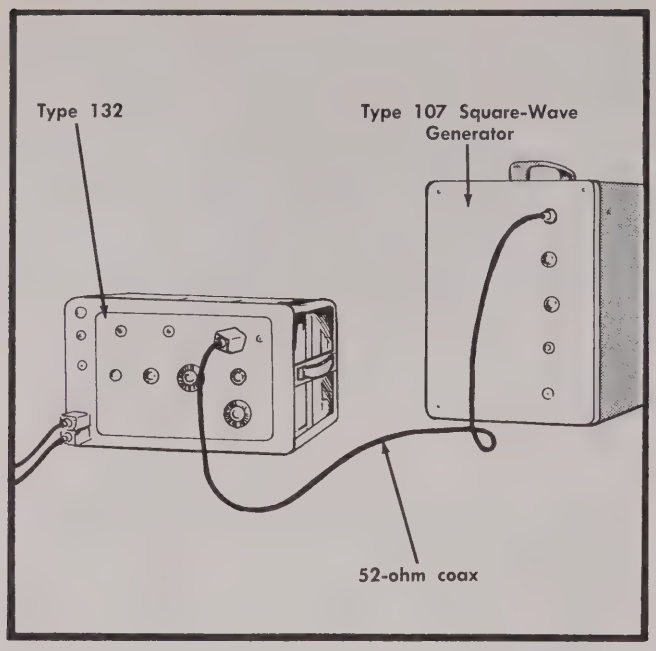

Fig. 3-6. The Tektronix Type 107 Square-Wave Generator connected through a 52-ohm coaxial cable and a 52-ohm 10:1 "T" attenuator to the Type 132 for adjustment of transient response.

Input connector of the test oscilloscope and either OUTPUT connector of the Type 132. Set the triggering controls of the test oscilloscope for a free-running sweep, 0.1-millisecond per division. Check the test oscilloscope display for two traces. (Note: You may have to vary the Position controls of the Type CA Unit and the test oscilloscope to get both traces into the viewing area of the graticule.)

Remove the connection between the +Gate Out and +GATE IN connectors and connect between the CHOPPED BLANKING OUT connector on the rear panel of the Type 132 and the External Crt Cathode binding post on the oscilloscope. Set the Crt Cathode Selector switch on the oscilloscope to External Crt Cathode and remove the ground strap from the External Crt Cathode binding post. Set the Mode switch of the Type CA Plug-In Unit to Chopped and the ALT.-CHOP. switch of the Type 132 to CHOP. Set the sweep rate of the test oscilloscope to 10 microseconds per centimeter. Set the triggering controls of the test oscilloscope for a stable display. (Note: You may have to vary both Position controls of the Type CA Plug-In Unit in order to get the desired signal amplitude at the input of the test oscilloscope.) Set the Intensity control of the test oscilloscope for normal intensity. The rising and falling portions of the observed waveform should be barely discernible or entirely invisible. Set the Crt Cathode Selector switch of the oscilloscope to Dual-Trace Chopped Blanking — the rising and falling portions of the observed waveform should appear or become significantly brighter.

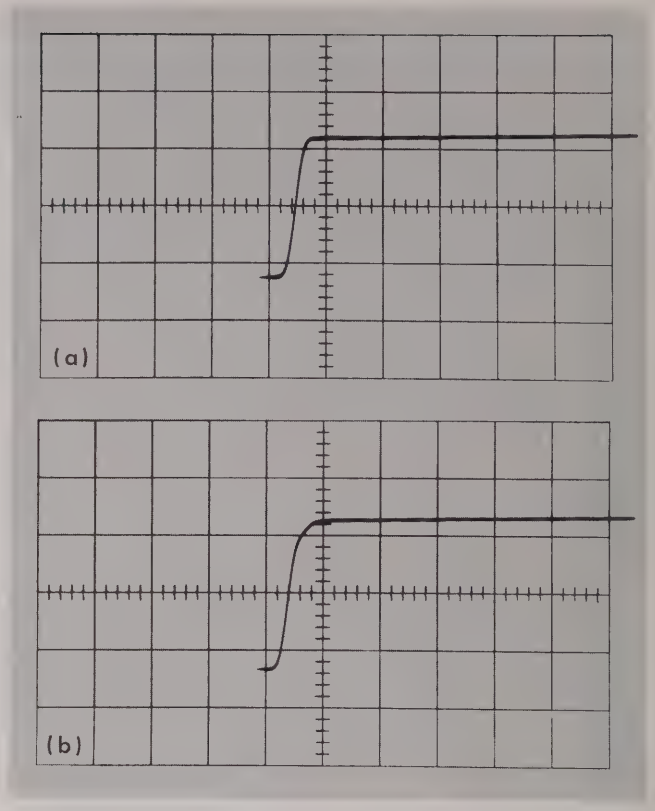

Fig. 3-7. Waveforms showing effect of transient response adjustments.

(a) L430 and L440 properly adjusted.

(b) L430 and/or L440 improperly adjusted.

ABBREVIATIONS AND SYMBOLS

A or amp	amperes
AC or ac	alternating current
AF	audio frequency
α	alpha—common-base current amplification factor
AM	amplitude modulation
$\approx$	approximately equal to
β	beta—common-emitter current amplification factor
BHB	binding head brass
BHS	binding head steel
BNC	baby series "N" connector
$\times$	by or times
C	carbon
C	capacitance
cap.	capacitor
cer	ceramic
cm	centimeter
comp	composition
conn	connector
$\sim$	cycle
c/s or cps	cycles per second
CRT	cathode-ray tube
csk	countersunk
Δ	increment
dB	decibel
dBm	decibel referred to one milliwatt
DC or dc	direct current
DE	double end
°	degrees
°C	degrees Celsius (degrees centigrade)
°F	degrees Fahrenheit
°K	degrees Kelvin
dia	diameter
$\div$	divide by
div	division
EHF	extremely high frequency
elect.	electrolytic
EMC	electrolytic, metal cased
EMI	electromagnetic interference (see RFI)
EMT	electrolytic, metal tubular
ε	epsilon—2.71828 or % of error
$\geq$	equal to or greater than
$\leq$	equal to or less than
ext	external
F or f	farad
F & I	focus and intensity
FHB	flat head brass
FHS	flat head steel
Fil HB	fillister head brass
Fil HS	fillister head steel
FM	frequency modulation
ft	feet or foot
G	giga or 10^9
g	acceleration due to gravity
Ge	germanium
GHz	gigahertz
GMV	guaranteed minimum value
GR	General Radio
$>$	greater than
H or h	henry
h	height or high
hex.	hexagonal
HF	high frequency
HHB	hex head brass
HHS	hex head steel
HSB	hex socket brass
HSS	hex socket steel
HV	high voltage
Hz	hertz (cycles per second)
ID	inside diameter
IF	intermediate frequency
in.	inch or inches
incd	incandescent
∞	infinity
int	internal
$\int$	integral
k	kilohms or kilo (10^3)
k Ω	kilohm
kc	kilocycle
kHz	kilohertz
L	inductance
λ	lambda—wavelength
$\gg$	large compared with
$<$	less than
LF	low frequency
lg	length or long
LV	low voltage
M	mega or 10^6
m	milli or 10^{-3}
MΩ or meg	megohm
μ	micro or 10^{-6}
mc	megacycle
met.	metal
MHz	megahertz
mm	millimeter
ms	millisecond
—	minus
mtg hdw	mounting hardware
n	nano or 10^{-9}
no. or #	number
ns	nanosecond
OD	outside diameter
OHB	oval head brass
OHS	oval head steel
Ω	omega—ohms
ω	omega—angular frequency
p	pico or 10^{-12}
/	per
%	percent
PHB	pan head brass
ϕ	phi—phase angle
π	pi—3.1416
PHS	pan head steel
$+$	plus
$\pm$	plus or minus
PIV	peak inverse voltage
plstc	plastic
PMC	paper, metal cased
poly	polystyrene
prec	precision
PT	paper, tubular
PTM	paper or plastic, tubular, molded
pwr	power
Q	figure of merit
RC	resistance capacitance
RF	radio frequency
RFI	radio frequency interference (see EMI)
RHB	round head brass
ρ	rho—resistivity
RHS	round head steel
r/min or rpm	revolutions per minute
RMS	root mean square
s or sec.	second
SE	single end
Si	silicon
SN or S/N	serial number
$\ll$	small compared with
T	tera or 10^{12}
TC	temperature compensated
TD	tunnel diode
THB	truss head brass
θ	theta—angular phase displacement
thk	thick
THS	truss head steel
tub.	tubular
UHF	ultra high frequency
V	volt
VAC	volts, alternating current
var	variable
VDC	volts, direct current
VHF	very high frequency
VSWR	voltage standing wave ratio
W	watt
w	wide or width
w/	with
w/o	without
WW	wire-wound
xmfr	transformer

PARTS ORDERING INFORMATION

Replacement parts are available from or through your local Tektronix, Inc. Field Office or representative.

Changes to Tektronix instruments are sometimes made to accommodate improved components as they become available, and to give you the benefit of the latest circuit improvements developed in our engineering department. It is therefore important, when ordering parts, to include the following information in your order: Part number, instrument type or number, serial or model number, and modification number if applicable.

If a part you have ordered has been replaced with a new or improved part, your local Tektronix, Inc. Field Office or representative will contact you concerning any change in part number.

SPECIAL NOTES AND SYMBOLS

×000	Part first added at this serial number
00×	Part removed after this serial number
*000-0000-00	Asterisk preceding Tektronix Part Number indicates manufactured by or for Tektronix, Inc., or reworked or checked components.
Use 000-0000-00	Part number indicated is direct replacement.
◐	Screwdriver adjustment.
▭	Control, adjustment or connector.

SECTION 4

ELECTRICAL PARTS LIST

Values are fixed unless marked Variable.

Ckt. No.	Tektronix Part No.	Description					S/N Range
		Bulb					
B601	150-0018-00	Incandescent, GE#12					
		Capacitors					
Tolerance ±20% unless otherwise indicated.							
C424	283-0003-00	0.01 μF	Cer		150 V		
C430	283-0553-00	500 pF	Mica		500 V	1%	
C432	283-0526-00	0.001 μF	Mica		500 V	1%	
C437	283-0012-00	0.1 μF	Cer		100 V		101-1349
C437	283-0057-00	0.1 μF	Cer		200 V	+80%—20%	1350-up
C440	283-0553-00	500 pF	Mica		500 V	1%	
C442	283-0526-00	0.001 μF	Mica		500 V	1%	
C446	281-0044-00	80-480 pF	Mica	Var			
C447	283-0526-00	0.001 μF	Mica		500 V	1%	
C474	283-0003-00	0.01 μF	Cer		150 V		
C601	285-0553-00	1 μF	PMC		600 V		X940-up
C612A,B	Use 290-0130-00	2 x 125 μF	Elect.		350 V		
C621	283-0008-00	0.1 μF	Cer		500 V		
C636	283-0008-00	0.1 μF	Cer		500 V		
C642	Use 290-0078-00	2 x 200 μF	Elect.		250 V		
C658	283-0008-00	0.1 μF	Cer		500 V		
C667A,B,C	Use 290-0072-00	40 x 20 x 20 μF	Elect.		475 V		
C672A,B	Use 290-0156-00	80 x 125 μF	Elect.		400 V/250 V		
C688	283-0008-00	0.1 μF	Cer		500 V		
C698	283-0008-00	0.1 μF	Cer		500 V		
C918	283-0002-00	0.01 μF	Cer		500 V		101-1994X
C920	281-0505-00	12 pF	Cer		500 V	10%	101-1994
C920	281-0542-00	18 pF	Cer		500 V	10%	1995-up
C921	283-0002-00	0.01 μF	Cer		500 V		
C924	283-0002-00	0.01 μF	Cer		500 V		
C927	283-0008-00	0.01 μF	Cer		500 V		
C929	281-0543-00	270 pF	Cer		500 V	10%	
C930	283-0000-00	0.001 μF	Cer		500 V		

Diodes

Ckt. No.	Tektronix Part No.	Description		S/N Range
D465	152-0007-00	Germanium	HD2948	101-1749
D465	*152-0075-00	Germanium	Tek Spec	1750-up
D466	152-0007-00	Germanium	HD2948	101-1749
D466	*152-0075-00	Germanium	Tek Spec	1750-up
D612A,B,C,D (4)	*152-0047-00	Silicon	Replaceable by 1N2862	101-2029
D612A,B,C,D (4)	152-0066-00	Silicon	1N3194	2030-up
D642A,B,C,D (4)	*152-0047-00	Silicon	Replaceable by 1N2862	101-2029
D642A,B,C,D (4)	152-0066-00	Silicon	1N3194	2030-up
D672A,B (2)	*152-0047-00	Silicon	Replaceable by 1N2862	101-2029
D672A,B (2)	152-0066-00	Silicon	1N3194	2030-up
D674A,B (2)	*152-0047-00	Silicon	Replaceable by 1N2862	101-2029
D674A,B (2)	152-0066-00	Silicon	1N3194	2030-up
D926	*152-0185-00	Silicon	Replaceable by 1N3605	X1995-up

Fuse

F601	159-0015-00	3A 3AG Fast-Blo

Inductors

L430	*114-0144-00	6.9-11 μH	Var	Core 276-0506-00	101-384
L430	*114-0152-00	8-16 μH	Var	Core 276-0506-00	385-up
L440	*114-0144-00	6.9-11 μH	Var	Core 276-0506-00	101-384
L440	*114-0152-00	8-16 μH	Var	Core 276-0506-00	385-up
L460	*108-0182-00	0.3 μH			
L470	*108-0182-00	0.3 μH			

Resistors

Resistors are fixed, composition, ±10% unless otherwise indicated.

R410	302-0470-00	47 Ω	½ W			
R413	*312-0602-00	10 kΩ	5 W	(checked)	WW	1%
R415	308-0120-00	2.5 kΩ	5 W		WW	5%
R420	302-0470-00	47 Ω	½ W			
R423	*312-0602-00	10 kΩ	5 W	(checked)	WW	1%
R424	316-0474-00	470 kΩ	¼ W			
R430	309-0023-00	2 MΩ	½ W		Prec	1%
R432	309-0274-00	1.4 kΩ	½ W		Prec	1%
R433	309-0162-00	250 kΩ	½ W		Prec	1%
R435	309-0138-00	111 kΩ	½ W		Prec	1%
R436	311-0162-00	1 MΩ	Var			
R437	302-0825-00	8.2 MΩ	½ W			
R440	309-0023-00	2 MΩ	½ W		Prec	1%
R442	309-0274-00	1.4 kΩ	½ W		Prec	1%

Resistors *(Cont)*

Ckt. No.	Tektronix Part No.	Description					S/N Range
R443	309-0162-00	250 kΩ	½ W		Prec	1%	
R445	309-0138-00	111 kΩ	½ W		Prec	1%	
R450	302-0470-00	47 Ω	½ W				
R451	302-0470-00	47 Ω	½ W				
R456	303-0472-00	4.7 kΩ	1 W			5%	
R457	303-0472-00	4.7 kΩ	1 W			5%	
R460	302-0470-00	47 Ω	½ W				
R462	311-0005-00	500 Ω		Var			
R463	308-0135-00	5 kΩ	5 W		WW	5%	
R465	301-0510-00	51 Ω	½ W			5%	
R467	308-0091-00	2 kΩ	5 W		WW	5%	
R470	302-0470-00	47 Ω	½ W				
R473	308-0135-00	5 kΩ	5 W		WW	5%	
R474	316-0474-00	470 kΩ	¼ W				
R475	311-0005-00	500 Ω		Var			
R476	302-0101-00	100 Ω	½ W				
R477	308-0091-00	2 kΩ	5 W		WW	5%	
R604	302-0102-00	1 kΩ	½ W				
R605	302-0102-00	1 kΩ	½ W				
R607	302-0102-00	1 kΩ	½ W				
R608	302-0102-00	1 kΩ	½ W				
R610	304-0100-00	10 Ω	1 W				
R619	304-0103-00	10 kΩ	1 W				
R620	302-0104-00	100 kΩ	½ W				
R621	302-0102-00	1 kΩ	½ W				
R623	302-0105-00	1 MΩ	½ W				
R624	302-0102-00	1 kΩ	½ W				
R627	308-0055-00	1.5 kΩ	10 W		WW	5%	
R628	301-0273-00	27 kΩ	½ W			5%	
R630	302-0102-00	1 kΩ	½ W				
R631	302-0564-00	560 kΩ	½ W				
R632	309-0279-00	180 kΩ	½ W		Prec	1%	
R634	311-0023-00	50 kΩ		Var			
R636	309-0049-00	150 kΩ	½ W		Prec	1%	
R640	308-0166-00	16 Ω	5 W		WW	5%	
R641	307-0007-00	2.7 Ω	1 W				
R650	302-0563-00	56 kΩ	½ W				
R651	302-0563-00	56 kΩ	½ W				
R653	302-0105-00	1 MΩ	½ W				
R654	302-0102-00	1 kΩ	½ W				
R655	302-0102-00	1 kΩ	½ W				
R658	309-0140-00	500 kΩ	½ W		Prec	1%	
R659	309-0009-00	720 kΩ	½ W		Prec	1%	
R663	304-0470-00	47 Ω	1 W				
R664	302-0102-00	1 kΩ	½ W				

Resistors *(Cont)*

Ckt. No.	Tektronix Part No.	Description				S/N Range
R665	304-0470-00	47 Ω	1 W			
R667	308-0037-00	1 kΩ	25 W	WW	5%	
R668	308-0045-00	167 Ω	5 W	WW	5%	
R670	304-0100-00	10 Ω	1 W			
R671	304-0100-00	10 Ω	1 W			
R672	302-0104-00	100 kΩ	½ W			
R673	306-0104-00	100 kΩ	2 W			
R683	302-0105-00	1 MΩ	½ W			
R684	302-0102-00	1 kΩ	½ W			
R685	302-0102-00	1 kΩ	½ W			
R686	302-0102-00	1 kΩ	½ W			
R688	309-0149-00	1.2 MΩ	½ W	Prec	1%	
R689	309-0141-00	750 kΩ	½ W	Prec	1%	
R690	302-0564-00	560 kΩ	½ W			
R691	302-0563-00	56 kΩ	½ W			
R693	302-0105-00	1 MΩ	½ W			
R694	302-0102-00	1 kΩ	½ W			
R695	302-0102-00	1 kΩ	½ W			
R698	309-0012-00	970 kΩ	½ W	Prec	1%	
R699	309-0143-00	950 kΩ	½ W	Prec	1%	
R916	301-0305-00	3 MΩ	½ W		5%	101-1994
R916	301-0105-00	1 MΩ	½ W		5%	1995-up
R917	302-0472-00	4.7 kΩ	½ W			101-1994X
R918	309-0148-00	1 MΩ	½ W	Prec	1%	
R919	309-0140-00	500 kΩ	½ W	Prec	1%	
R920	302-0102-00	1 kΩ	½ W			
R923	309-0290-00	21.5 kΩ	½ W	Prec	1%	
R924	309-0100-00	10 kΩ	½ W	Prec	1%	
R925	302-0102-00	1 kΩ	½ W			
R926	302-0103-00	10 kΩ	½ W			
R927	302-0102-00	1 kΩ	½ W			
R928	302-0223-00	22 kΩ	½ W			X1995-up
R929	302-0472-00	4.7 kΩ	½ W			

Switches

	Unwired	Wired		
SW601	260-0134-00		Toggle	POWER ON
SW924	260-0212-00		Slide	CHOP ALT

Thermal Cut-Out

TK601	260-0120-00	137°F ±5°

Transformer

Ckt. No.	Tektronix Part No.	Description		S/N Range
T601	*120-0227-00	Power		

Electron Tubes

Ckt. No.	Tektronix Part No.	Description		S/N Range
V414	154-0212-00	6EW6		101-999
V424	154-0212-00	6EW6		101-999
V414 } V424 }	*157-0069-00	6EW6	checked (1 pair)	1000-up
V453	154-0187-00	6DJ8		
V464	154-0031-00	6CL6		
V474	154-0031-00	6CL6		
V619	154-0291-00	0G3		
V624	154-0095-00	6AW8		
V627	154-0307-00	7233		
V654	154-0095-00	6AW8		
V667	154-0056-00	6080		
V687	154-0202-00	6CW5		
V697	154-0260-00	7734		
V924	154-0187-00	6DJ8		

FIGURE AND INDEX NUMBERS

Items in this section are referenced by figure and index numbers to the illustrations which appear on the pullout pages immediately following the Diagrams section of this instruction manual.

INDENTATION SYSTEM

This mechanical parts list is indented to indicate item relationships. Following is an example of the indentation system used in the Description column.

Assembly and/or Component
  Detail Part of Assembly and/or Component
  mounting hardware for Detail Part
    Parts of Detail Part
    mounting hardware for Parts of Detail Part
mounting hardware for Assembly and/or Component

Mounting hardware always appears in the same indentation as the item it mounts, while the detail parts are indented to the right. Indented items are part of, and included with, the next higher indentation.

Mounting hardware must be purchased separately, unless otherwise specified.

PARTS ORDERING INFORMATION

Replacement parts are available from or through your local Tektronix, Inc. Field Office or representative.

Changes to Tektronix instruments are sometimes made to accommodate improved components as they become available, and to give you the benefit of the latest circuit improvements developed in our engineering department. It is therefore important, when ordering parts, to include the following information in your order: Part number, instrument type or number, serial or model number, and modification number if applicable.

If a part you have ordered has been replaced with a new or improved part, your local Tektronix, Inc. Field Office or representative will contact you concerning any change in part number.

Change information, if any, is located at the rear of this manual.

ABBREVIATIONS AND SYMBOLS

For an explanation of the abbreviations and symbols used in this section, please refer to the page immediately preceding the Electrical Parts List in this instruction manual.

INDEX OF MECHANICAL PARTS LIST ILLUSTRATIONS

(Located behind diagrams)

FIG. 1	FRONT
FIG. 2	POWER CHASSIS
FIG. 3	CABINET & RAILS
FIG. 4	REAR
FIG. 5	ACCESSORIES

SECTION 5

MECHANICAL PARTS LIST

FIG. 1 FRONT

Fig. & Index No.	Tektronix Part No.	Serial/Model No. Eff	Disc	Qty	Description 1 2 3 4 5
1-1	333-0663-00			1	PANEL, front
	- - - - - -			-	mounting hardware: (not included w/panel)
-2	213-0035-00			2	SCREW, thread forming, 4-40 x 1/4 inch, PHS
-3	387-0442-00			1	PLATE, sub panel, front
-4	260-0134-00			1	SWITCH, toggle—POWER ON
	- - - - - -			-	switch includes:
-5	210-0414-00			1	NUT, hex., 15/32-32 x 9/16 inch
	- - - - - -			-	mounting hardware: (not included w/switch)
-6	354-0055-00			1	RING, locking, switch
-7	210-0902-00			1	WASHER, flat, 0.470 ID x 21/32 inch OD
-8	210-0473-00			1	NUT, 12 sided, 15/32-32 x 0.634 inch
-9	129-0035-00			2	ASSEMBLY, binding post
	- - - - - -			-	each assembly includes:
-10	200-0103-00			1	CAP, binding post
-11	355-0507-00			1	STEM, binding post adapter
-12	210-0046-00			1	LOCKWASHER, internal, 0.261 ID x 0.400 inch OD
-13	210-0455-00			1	NUT, hex., 1/4-28 x 3/8 inch
-14	- - - - - -			2	RESISTOR, variable
	- - - - - -			-	mounting hardware for each: (not included w/resistor)
-15	210-0494-00			1	NUT, hex., 3/8-32 x 1/2 x 11/16 inch
-16	358-0010-00			1	BUSHING, panel
-17	136-0047-00	101	2379	1	SOCKET, light w/red jewel
	136-0079-00	2380		1	SOCKET, light, w/green jewel
-18	131-0081-00	101	1029	2	CONNECTOR, coaxial, 1 contact, UHF, w/hardware
	131-0126-00	1030		2	CONNECTOR, coaxial, 1 contact, BNC, w/hardware
-19	406-0245-00			2	BRACKET, ground clip
	- - - - - -			-	mounting hardware for each: (not included w/bracket)
-20	211-0559-00			2	SCREW, 6-32 x 3/8 inch, FHS
-21	210-0437-00			2	NUT, speed, #6
-22	387-0439-00			1	PLATE, plug-in support
	- - - - - -			-	mounting hardware: (not included w/plate)
	211-0559-00			3	SCREW, 6-32 x 3/8 inch, FHS
-23	210-0457-00			3	NUT, keps, 6-32 x 5/16 inch
-24	211-0507-00			4	SCREW, 6-32 x 5/16 inch, PHS
-25	343-0004-00			1	CLAMP, cable, 5/16 inch
	- - - - - -			-	mounting hardware: (not included w/clamp)
-26	211-0507-00			1	SCREW, 6-32 x 5/16 inch, PHS
-27	210-0803-00			1	WASHER, flat, 0.150 ID x 3/8 inch OD

FIG. 1 FRONT *(Cont)*

Fig. & Index No.	Tektronix Part No.	Serial/Model No. Eff	Disc	Qty	Description 1 2 3 4 5
1-28	441-0385-00			1	CHASSIS, amplifier
	- - - - - -			-	mounting hardware: (not included w/chassis)
-29	211-0504-00			3	SCREW, 6-32 x 1/4 inch, PHS
-30	- - - - - -			2	COIL
	- - - - - -			-	mounting hardware for each: (not included w/coil)
-31	213-0044-00			1	SCREW, thread forming, 5-32 x 3/16 inch, PHS
-32	- - - - - -			1	RESISTOR
	- - - - - -			-	mounting hardware: (not included w/resistor)
-33	211-0544-00			1	SCREW, 6-32 x 3/4 inch, THS
-34	210-0202-00			1	LUG, solder, SE #6
-35	210-0478-00			1	NUT, hex., 5/16 x 21/32 inch long
-36	211-0507-00			1	SCREW, 6-32 x 5/16 inch, PHS
-37	406-0705-00			1	BRACKET, variable resistor
	- - - - - -			-	mounting hardware: (not included w/bracket)
-38	211-0504-00			2	SCREW, 6-32 x 1/4 inch, PHS
-39	- - - - - -			1	RESISTOR, variable
	- - - - - -			-	mounting hardware: (not included w/resistor)
-40	210-0046-00			1	LOCKWASHER, internal, 0.261 ID x 0.400 inch OD
-41	210-0583-00			1	NUT, hex., 1/4-32 x 5/16 inch
-42	210-0201-00			1	LUG, solder, SE #4
	- - - - - -			-	mounting hardware: (not included w/lug)
	213-0044-00			1	SCREW, thread forming, 5-32 x 3/16 inch, PHS
-43	136-0008-00			2	SOCKET, tube, 7 pin w/ground lugs
	- - - - - -			-	mounting hardware for each: (not included w/socket)
-44	213-0044-00			2	SCREW, thread forming, 5-32 x 3/16 inch, PHS
-45	136-0015-00			3	SOCKET, tube, 9 pin w/ground lugs
	- - - - - -			-	mounting hardware for each: (not included w/socket)
-46	213-0044-00			2	SCREW, thread forming, 5-32 x 3/16 inch, PHS
-47	131-0181-00			2	CONNECTOR, terminal standoff
	- - - - - -			-	mounting hardware for each: (not included w/connector)
-48	358-0136-00			1	BUSHING, plastic
-49	387-0443-00			1	PLATE, bulkhead
-50	348-0005-00			1	GROMMET, rubber, 1/2 inch
-51	348-0004-00			1	GROMMET, rubber, 3/8 inch

FIG. 1 FRONT *(Cont)*

Fig. & Index No.	Tektronix Part No.	Serial/Model No. Eff	Disc	Qty	Description 1 2 3 4 5
1-52	131-0018-00			1	CONNECTOR, 16 contact, female
	- - - - - -			-	mounting hardware: (not included w/connector)
-53	211-0016-00			2	SCREW, 4-40 x 5/8 inch, PHS
-54	166-0031-00			2	TUBE, spacer, 0.180 ID x 1/4 inch OD
-55	210-0004-00			2	LOCKWASHER, internal, #4
-56	210-0406-00			2	NUT, hex., 4-40 x 3/16 inch
-57	- - - - - -			1	THERMAL CUTOUT
	- - - - - -			-	mounting hardware: (not included w/thermal cutout)
	211-0504-00			2	SCREW, 6-32 x 1/4 inch, PHS
	210-0006-00			2	LOCKWASHER, internal, #6
	210-0407-00			2	NUT, hex., 6-32 x 1/4 inch
-58	348-0031-00			2	GROMMET, plastic, 1/4 inch diameter
-59	124-0106-00			2	STRIP, ceramic, 7/16 inch h w/11 notches
	- - - - - -			-	each strip includes:
	355-0046-00			2	STUD, plastic
	- - - - - -			-	mounting hardware for each: (not included w/strip)
	361-0009-00			2	SPACER, plastic, 0.406 inch long
-60	124-0092-00			1	STRIP, ceramic, 7/16 inch h, w/3 notches
	- - - - - -			-	strip includes:
	355-0046-00			1	STUD, plastic
	- - - - - -			-	mounting hardware: (not included w/strip)
	361-0009-00			1	SPACER, plastic, 0.406 inch long
-61	124-0093-00			2	STRIP, ceramic, 7/16 inch h, w/5 notches
	- - - - - -			-	each strip includes:
	355-0046-00			2	STUD, plastic
	- - - - - -			-	mounting hardware for each: (not included w/strip)
	361-0009-00			2	SPACER, plastic, 0.406 inch long
-62	124-0095-00			1	STRIP, ceramic, 7/16 inch h, w/9 notches
	- - - - - -			-	strip includes:
	355-0046-00			2	STUD, plastic
	- - - - - -			-	mounting hardware: (not included w/strip)
	361-0009-00			2	SPACER, plastic, 0.406 inch long
-63	179-0538-00			1	CABLE HARNESS, vertical amplifier

FIG. 2 POWER CHASSIS

Fig. & Index No.	Tektronix Part No.	Serial/Model No. Eff	Disc	Qty	Description 1 2 3 4 5
2-1	441-0386-00			1	CHASSIS, power
	- - - - - -			-	mounting hardware: (not included w/chassis)
	212-0004-00			3	SCREW, 8-32 x 5/16 inch, PHS
	212-0040-00			3	SCREW, 8-32 x 3/8 inch, FHS
	210-0008-00			3	LOCKWASHER, internal, #8
	210-0804-00			6	WASHER, flat, 0.170 ID x 3/8 inch OD
	210-0409-00			3	NUT, hex., 8-32 x 5/16 inch
-2	- - - - - -			2	CAPACITOR
	- - - - - -			-	mounting hardware for each: (not included w/capacitor)
-3	386-0255-00			1	PLATE, large, metal
-4	211-0534-00			2	SCREW, sems, 6-32 x 5/16 inch, PHS
-5	210-0006-00			2	LOCKWASHER, internal, #6
-6	210-0407-00			2	NUT, hex., 6-32 x 1/4 inch
-7	136-0008-00			1	SOCKET, tube, 7 pin, w/ground lugs
	- - - - - -			-	mounting hardware: (not included w/socket)
-8	213-0044-00			2	SCREW, thread forming, 5-32 x 3/16 inch, PHS
-9	136-0015-00			6	SOCKET, tube, 9 pin, w/ground lugs
	- - - - - -			-	mounting hardware for each: (not included w/socket)
-10	213-0044-00			2	SCREW, thread forming, 5-32 x 3/16 inch, PHS
-11	136-0013-00			1	SOCKET, tube, 8 pin
	- - - - - -			-	mounting hardware: (not included w/socket)
	211-0507-00			2	SCREW, 6-32 x 5/16 inch, PHS
-12	210-0006-00			2	LOCKWASHER, internal, #6
-13	210-0407-00			2	NUT, hex., 6-32 x 1/4 inch
-14	348-0005-00			2	GROMMET, rubber, 1/2 inch
-15	348-0012-00			1	GROMMET, rubber, 5/8 inch
-16	- - - - - -			1	RESISTOR, variable
	- - - - - -			-	mounting hardware: (not included w/resistor)
-17	210-0840-00			1	WASHER, flat, 0.390 ID x 9/16 inch OD
-18	210-0413-00			1	NUT, hex., 3/8-32 x 1/2 inch
-19	- - - - - -			1	RESISTOR
	- - - - - -			-	mounting hardware: (not included w/resistor)
-20	211-0544-00			1	SCREW, 6-32 x 3/4 inch, THS
-21	210-0478-00			1	NUT, hex., 5/16 x 21/32 inch long
-22	211-0507-00			1	SCREW, 6-32 x 5/16 inch, PHS

FIG. 2 POWER CHASSIS *(Cont)*

Fig. & Index No.	Tektronix Part No.	Serial/Model No. Eff	Disc	Qty	Description 1 2 3 4 5
2-23	- - - - - -			1	RESISTOR
	- - - - - -			-	mounting hardware: (not included w/resistor)
-24	211-0553-00			1	SCREW, 6-32 x 1 1/2 inches, RHS
-25	210-0601-00			1	EYELET, tapered barrel
-26	210-0478-00			1	NUT, hex., 5/16 x 21/32 inch long
-27	211-0507-00			1	SCREW, 6-32 x 5/16 inch, PHS
-28	- - - - - -			1	RESISTOR
-29	212-0037-00			1	SCREW, 8-32 x 1 3/4 inches, FIL HS
-30	210-0008-00			1	LOCKWASHER, internal, #8
-31	210-0809-00			1	WASHER, centering
-32	210-0462-00			1	NUT, hex., 8-32 x 23/64 inch long
-33	212-0004-00			1	SCREW, 8-32 x 5/16 inch, PHS
-34	- - - - - -			1	CAPACITOR
	- - - - - -			-	mounting hardware: (not included w/capacitor)
-35	386-0254-00			1	PLATE, large, fiber
	432-0044-00	X555	1849X	1	BASE, capacitor mounting
-36	211-0543-00	101	554	2	SCREW, 6-32 x 5/16 inch, RHS
	211-0514-00	555	1849	2	SCREW, 6-32 x 3/4 inch, PHS
	211-0543-00	1850		2	SCREW, 6-32 x 5/16 inch, RHS
-37	210-0006-00			2	LOCKWASHER, internal, #6
-38	210-0407-00			2	NUT, hex., 6-32 x 1/4 inch
-39	200-0261-00	101	554	1	COVER, capacitor, plastic, 1.365 ID x 4 1/16 inch long
	200-0259-00	555	1709	1	COVER, capacitor, plastic, 1.365 ID x 3 9/16 inch long
	200-0293-00	1710	1849	1	COVER, capacitor, plastic, 1.365 ID x 2 9/16 inch long
	200-0258-00	1850		1	COVER, capacitor, plastic, 1.365 ID x 3 1/32 inch long
-40	- - - - - -			1	CAPACITOR
	- - - - - -			-	mounting hardware: (not included w/capacitor)
-41	386-0254-00			1	PLATE, large, fiber
-42	211-0543-00			2	SCREW, 6-32 x 5/16 inch, RHS
-43	210-0006-00			2	LOCKWASHER, internal, #6
-44	210-0407-00			2	NUT, hex., 6-32 x 1/4 inch
-45	200-0259-00			1	COVER, capacitor, plastic, 1.365 ID x 3 9/16 inch long
-46	- - - - - -			1	TRANSFORMER
	- - - - - -			-	transformer includes:
-47	212-0545-00			4	SCREW, 10-32 x 4 inches, hex., HS
-48	210-0812-00			4	WASHER, fiber, #10 shouldered
-49	406-0706-00			1	BRACKET, transformer
	- - - - - -			-	mounting hardware: (not included w/transformer)
-50	220-0410-00			4	NUT, keps, 10-32 x 3/8 inch
	211-0510-00			2	SCREW, 6-32 x 3/8 inch, PHS
	210-0803-00			2	WASHER, flat, 0.150 ID x 3/8 inch OD
-51	210-0457-00			2	NUT, keps, 6-32 x 5/16 inch

FIG. 2 POWER CHASSIS *(Cont)*

Fig. & Index No.	Tektronix Part No.	Serial/Model No. Eff	Disc	Qty	Description 1 2 3 4 5
2-52	179-0537-00			1	CABLE HARNESS, power
-53	179-0539-00			1	CABLE HARNESS, 110 volt
-54	124-0091-00			5	STRIP, ceramic, 3/4 h, w/11 notches
	- - - - - -			-	each strip includes:
	355-0046-00			2	STUD, plastic
	- - - - - -			-	mounting hardware for each: (not included w/strip)
	361-0008-00			2	SPACER, plastic, 0.281 inch long
-55	124-0090-00			5	STRIP, ceramic, 3/4 h, w/9 notches
	- - - - - -			-	each strip includes:
	355-0046-00			2	STUD, plastic
	- - - - - -			-	mounting hardware for each: (not included w/strip)
	361-0008-00			2	SPACER, plastic, 0.281 inch long
-56	124-0088-00			1	STRIP, ceramic, 3/4 inch h, w/4 notches
	- - - - - -			-	strip includes:
	355-0046-00			2	STUD, plastic
	- - - - - -			-	mounting hardware: (not included w/strip)
	361-0008-00			2	SPACER, plastic, 0.281 inch long

FIG. 3 CABINET & RAILS

Fig. & Index No.	Tektronix Part No.	Serial/Model No. Eff	Disc	Qty	Description 1 2 3 4 5
3-1	381-0189-00	101	1319	1	ASSEMBLY, top support bar
	- - - - - -			-	assembly includes:
-2	406-0718-00			1	BRACKET, plug-in
-3	367-0029-00	101	1319	1	ASSEMBLY, handle
	- - - - - -			-	assembly includes:
-4	346-0011-00	101	1319	1	STRAP, alum. ornamental
	- - - - - -			-	mounting hardware: (not included w/strap)
	213-0045-00	101	1319	2	SCREW, self tapping, 4-40 x 5/16 inch
-5	214-0116-00	101	1319	2	LINK, handle
-6	367-0019-00	101	1319	1	HANDLE, grip, 6 inches long, 1 inch wide
-7	381-0156-00	101	1319	2	BAR, handle
	- - - - - -			-	mounting hardware for each: (not included w/bar)
-8	212-0507-00	101	1319	1	SCREW, 10-32 x 3/8 inch, PHS
	- - - - - -			-	mounting hardware: (not included w/handle assembly)
-9	211-0537-00			4	SCREW, 10-32 x 7/8 inch, FHS
	220-0410-00			1	mounting hardware: (not included w/bar assembly)
	212-0562-00			1	BAR, support bar mounting
	- - - - - -			-	SCREW, 6-32 x 3/8, THS
	381-0084-00			2	NUT, keps, 10-32 x 3/8 inch
	381-0230-00	1320		1	ASSEMBLY, top support bar
	- - - - - -			-	assembly includes:
	406-0718-00			1	BRACKET, plug-in (see ref. #2)
-10	367-0037-00	1320		1	HANDLE, blue
	- - - - - -			-	mounting hardware: (not included w/handle)
-11	344-0098-00	1320		2	CLIP, handle
-12	212-0562-00			1	SCREW, 10-32 x 7/8 inch, FHS
-13	212-0566-00	1320	2029	1	SCREW, 10-32 x 5/16 inch, RHS
	212-0507-00	2030		1	SCREW, 10-32 x 3/8 inch, PHS
	210-0010-00	X2030		1	LOCKWASHER, internal, #10
	- - - - - -			-	mounting hardware: (not included w/assembly)
	381-0084-00			2	BAR, support bar mounting
	211-0537-00			4	SCREW, 6-32 x 3/8 inch, THS
	220-0410-00			1	NUT, keps, 10-32 x 3/8 inch
-14	122-0097-00			1	ANGLE, rail, top left
	- - - - - -			-	mounting hardware: (not included w/angle)
	211-0559-00			5	SCREW, 6-32 x 3/8 inch, FHS
-15	210-0457-00			5	NUT, keps, 6-32 x 5/16 inch

FIG. 3 CABINET & RAILS *(Cont)*

Fig. & Index No.	Tektronix Part No.	Serial/Model No. Eff	Disc	Qty	Description 1 2 3 4 5
3-16	122-0098-00			1	ANGLE, rail, top right
	- - - - - -			-	mounting hardware: (not included w/angle)
-17	211-0559-00			5	SCREW, 6-32 x 3/8 inch, FHS
-18	210-0457-00			5	NUT, keps, 6-32 x 5/16 inch
-19	122-0095-00	101	554	1	ANGLE, rail, bottom right
	122-0096-00	101	554	1	ANGLE, rail, bottom left
	122-0106-00	555		2	ANGLE, rail, bottom left or right
	- - - - - -			-	mounting hardware for each: (not included w/angle)
-20	211-0542-00	101	554	2	SCREW, 6-32 x 5/16 inch, THS
	211-0507-00	555		2	SCREW, 6-32 x 5/16 inch, PHS
	211-0510-00			1	SCREW, 6-32 x 3/8 inch, PHS
	210-0803-00			1	WASHER, flat, 0.150 x 3/8 inch
	210-0457-00			1	NUT, keps, 6-32 x 5/16 inch
-21	387-0438-00			1	PLATE, cabinet side, left
	- - - - - -			-	plate includes:
-22	213-0033-00			1	SCREW, fastening, 8-32 x 1/2 inch
-23	210-0847-00			1	WASHER, plastic, 0.164 ID x 0.500 inch OD
-24	105-0007-00			1	STOP
-25	210-0864-00			1	WASHER, flat, 3/16 ID x 3/8 inch OD
-26	210-0447-00			1	NUT, cabinet fastening
-27	387-0437-00			1	PLATE, cabinet side, right
	- - - - - -			-	plate includes:
	213-0033-00			1	SCREW, fastening, 8-32 x 1/2 inch
	210-0847-00			1	WASHER, plastic, 0.164 ID x 0.500 inch OD
	105-0007-00			1	STOP
	210-0864-00			1	WASHER, flat, 3/16 ID x 3/8 inch OD
	210-0447-00			1	NUT, cabinet fastening
-28	387-0436-00	101	554	1	PLATE, cabinet, bottom
	387-0697-00	555		1	PLATE, cabinet, bottom
	- - - - - -			-	mounting hardware: (not included w/plate)
-29	211-0507-00			4	SCREW, 6-32 x 5/16 inch, PHS

FIG. 4 REAR

Fig. & Index No.	Tektronix Part No.	Serial/Model No. Eff	Disc	Qty	Description 1 2 3 4 5
4-	635-0206-00	101	939	1	ASSEMBLY, fan motor
	635-0207-00	940		1	ASSEMBLY, fan motor
	- - - - - -			-	assembly includes:
-1	369-0011-00	101	939	1	FAN
	369-0016-00	940		1	FAN
-2	147-0014-00	101	939	1	MOTOR
	147-0025-00	940		1	MOTOR
	- - - - - -			-	mounting hardware: (not included w/motor)
-3	212-0518-00	101	939	2	SCREW, 10-32 x 5/16 inch, PHS
	212-0061-00	940		2	SCREW, 8-32 x 1 1/2 inches, FHS
-4	166-0006-00	X940		2	TUBE, spacer
	210-0409-00	X940		2	NUT, hex., 8-32 x 5/16 inch
-5	426-0052-00	101	939	1	MOUNT, fan motor
	426-0053-00	940		1	MOUNT, fan motor
-6	348-0046-00	101	939	3	SHOCKMOUNT, rubber, 1/2 diameter x 1/2 inch long
	348-0008-00	940		3	SHOCKMOUNT, rubber, 1/2 diameter x 1/2 inch long
	- - - - - -			-	mounting hardware for each: (not included w/shockmount)
-7	210-0008-00			1	LOCKWASHER, internal, #8
-8	210-0409-00			1	NUT, hex., 8-32 x 5/16 inch
-9	201-0011-00			3	CUP, shockmount retainer
-10	354-0121-00			1	RING, fan mount
	- - - - - -			-	mounting hardware: (not included w/assembly)
-11	213-0104-00			4	SCREW, thread forming, 6-32 x 3/8 inch, THS
-12	260-0212-00			1	SWITCH, slide—CHOP ALT
	- - - - - -			-	mounting hardware: (not included w/switch)
-13	210-0406-00			2	NUT, hex., 4-40 x 3/16 inch
-14	387-0440-00	101	154	1	PLATE, rear overlay
	387-0593-00	155		1	PLATE, rear overlay
	- - - - - -			-	mounting hardware: (not included w/plate)
	213-0035-00			1	SCREW, thread forming, 4-40 x 1/4 inch, PHS
-15	387-0441-00	101	154	1	PLATE, rear subpanel
	387-0592-00	155		1	PLATE, rear subpanel
-16	131-0081-00	101	1029	1	CONNECTOR, coaxial, 1 contact, UHF, w/hardware
	131-0126-00	1030		1	CONNECTOR, coaxial, 1 contact, BNC, w/hardware
-17	131-0081-00	101	1029	1	CONNECTOR, coaxial, 1 contact, UHF, w/hardware
	131-0126-00	1030		1	CONNECTOR, coaxial, 1 contact, BNC, w/hardware
	- - - - - -			-	mounting hardware: (not included w/connector)
-18	210-0255-00	X1030		1	LUG, solder, 3/8 ID x 0.500 inch OD, SE

FIG. 4 REAR *(Cont)*

Fig. & Index No.	Tektronix Part No.	Serial/Model No. Eff	Disc	Qty	Description 1 2 3 4 5
4-19	352-0002-00			1	ASSEMBLY, fuse holder
	- - - - - -			-	assembly includes:
-20	352-0010-00			1	HOLDER, fuse
-21	200-0582-00			1	CAP, fuse holder
-22	210-0873-00			1	WASHER, rubber, 1/2 ID x 11/16 inch OD
-23	- - - - - -			1	NUT, hex., fuse holder
-24	- - - - - -	X940		2	CAPACITOR
	- - - - - -			-	mounting hardware: (not included w/capacitor)
-25	211-0538-00	X940		2	SCREW, 6-32 x 5/16 inch, FHS
-26	210-0803-00			2	WASHER, flat, 0.150 ID x 3/8 inch OD
-27	210-0457-00			2	NUT, keps, 6-32 x 5/16 inch
-28	131-0150-00	101	2309	1	ASSEMBLY, motor base
	131-0150-01	2310		1	ASSEMBLY, motor base
	- - - - - -			-	assembly includes:
-29	129-0041-00	101	2309	1	POST, ground
	129-0041-01	2310		1	POST, ground
-30	200-0185-00	101	2309	1	COVER
	200-0185-01	2310		1	COVER
-31	205-0014-00			1	SHELL, mounting
	210-0003-00	101	2309X	2	LOCKWASHER, external, #4
	210-0551-00	101	2309X	2	NUT, hex., 4-40 x 1 1/4 inch
	211-0132-00	X2310		2	SCREW, sems, 4-40 x 1/2 inch, PHS
-32	211-0015-00	101	2309	1	SCREW, 4-40 x 1/2 inch, RHS
	213-0088-00	2310		1	SCREW, thread forming, 4-40 x 1/4 inch, PHS
-33	214-0078-00			2	PIN, connecting
-34	377-0041-00	101	2309	1	INSERT, black
	377-0051-00	2310		1	INSERT, black
	- - - - - -			-	mounting hardware: (not included w/assembly)
-35	213-0104-00			2	SCREW, thread forming, 6-32 x 3/8 inch, PHS
-36	378-0765-00	X1150		1	SCREEN, mesh
-37	378-0019-00	101	1149	1	FILTER, air
	378-0025-00	1150		1	FILTER, air
-38	380-0015-00			1	HOUSING, air filter
	- - - - - -			-	mounting hardware: (not included w/housing)
-39	212-0031-00			4	SCREW, 8-32 x 1 1/4 inch, RHS
-40	210-0458-00			4	NUT, keps, 8-32 x 11/32 inch
-41	210-0402-00			4	NUT, cap, hex., 8-32 x 5/16 inch
-42	334-0649-00			1	TAG, voltage rating
	- - - - - -			-	mounting hardware: (not included w/tag)
	213-0088-00			2	SCREW, thread forming, 4-40 x 1/4 inch, PHS

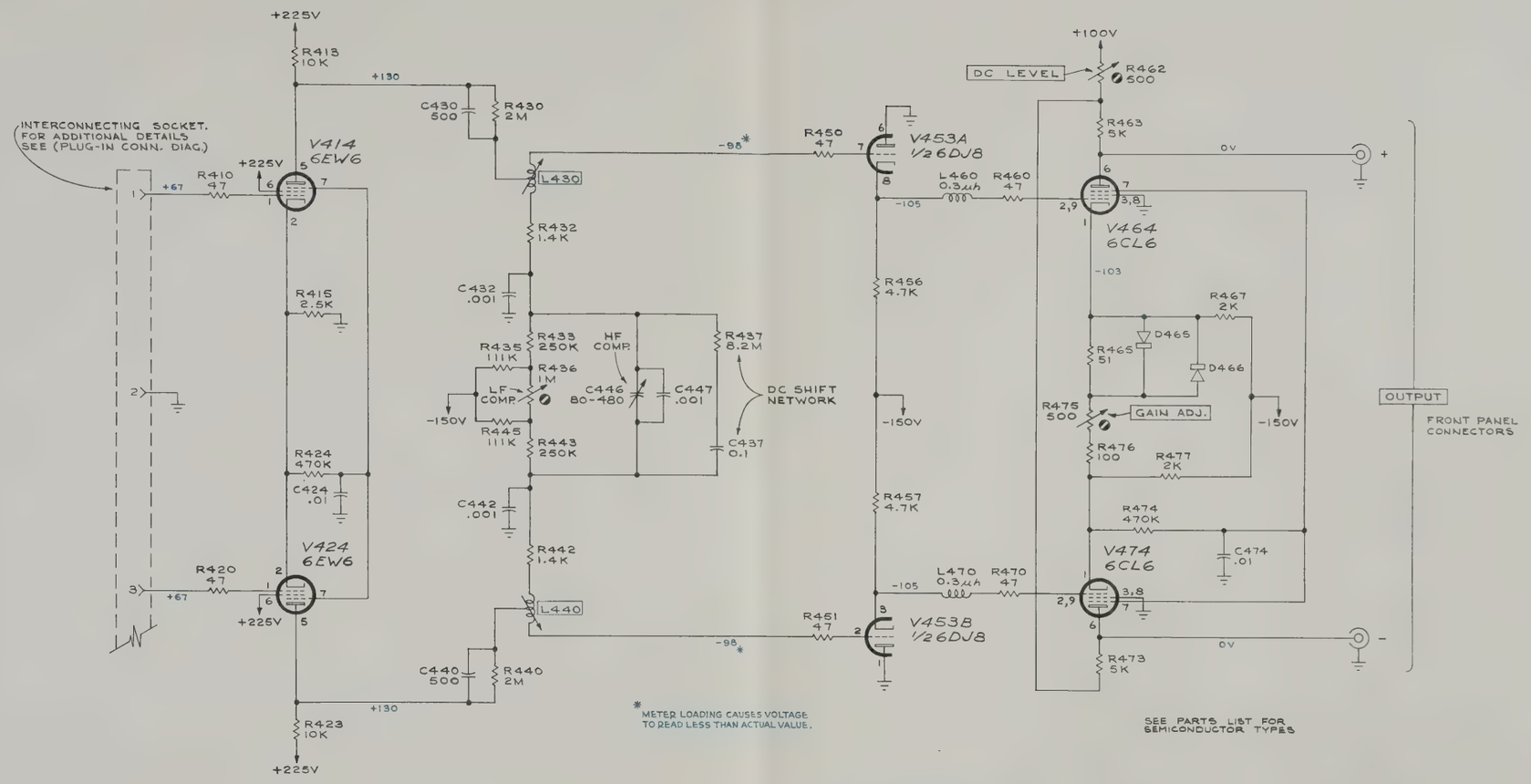

* METER LOADING CAUSES VOLTAGE TO READ LESS THAN ACTUAL VALUE.

SEE PARTS LIST FOR SEMICONDUCTOR TYPES

IMPORTANT:

ALL CIRCUIT VOLTAGES WERE OBTAINED WITH A 20,000Ω/V VOM. ALL READINGS ARE IN VOLTS. ACTUAL PHOTOGRAPHS OF WAVEFORMS ARE SHOWN.

VOLTAGE & WAVEFORM AMPLITUDE MEASUREMENTS ARE NOT ABSOLUTE. THEY MAY VARY BETWEEN INSTRUMENTS AS WELL AS WITHIN THE INSTRUMENT ITSELF DUE TO NORMAL MANUFACTURING TOLERANCES, TRANSISTOR, AND VACUUM TUBE CHARACTERISTICS.

VOLTAGE READINGS TAKEN UNDER THE FOLLOWING CONDITIONS:

LINE VOLTAGE ..... 117 VAC
PLUG-IN UNIT ..... TYPE CA
INPUT SIGNAL ..... NONE
PLUG-IN POSITION CONTROL ..... ELECTRICAL CENTER

SEE PARTS LIST FOR EARLIER VALUES AND S/N CHANGES OF PARTS MARKED WITH BLUE OUTLINE

TYPE 132

MRH
7-11-61

AMPLIFIER

CIRCUIT NUMBERS 401 THRU 499

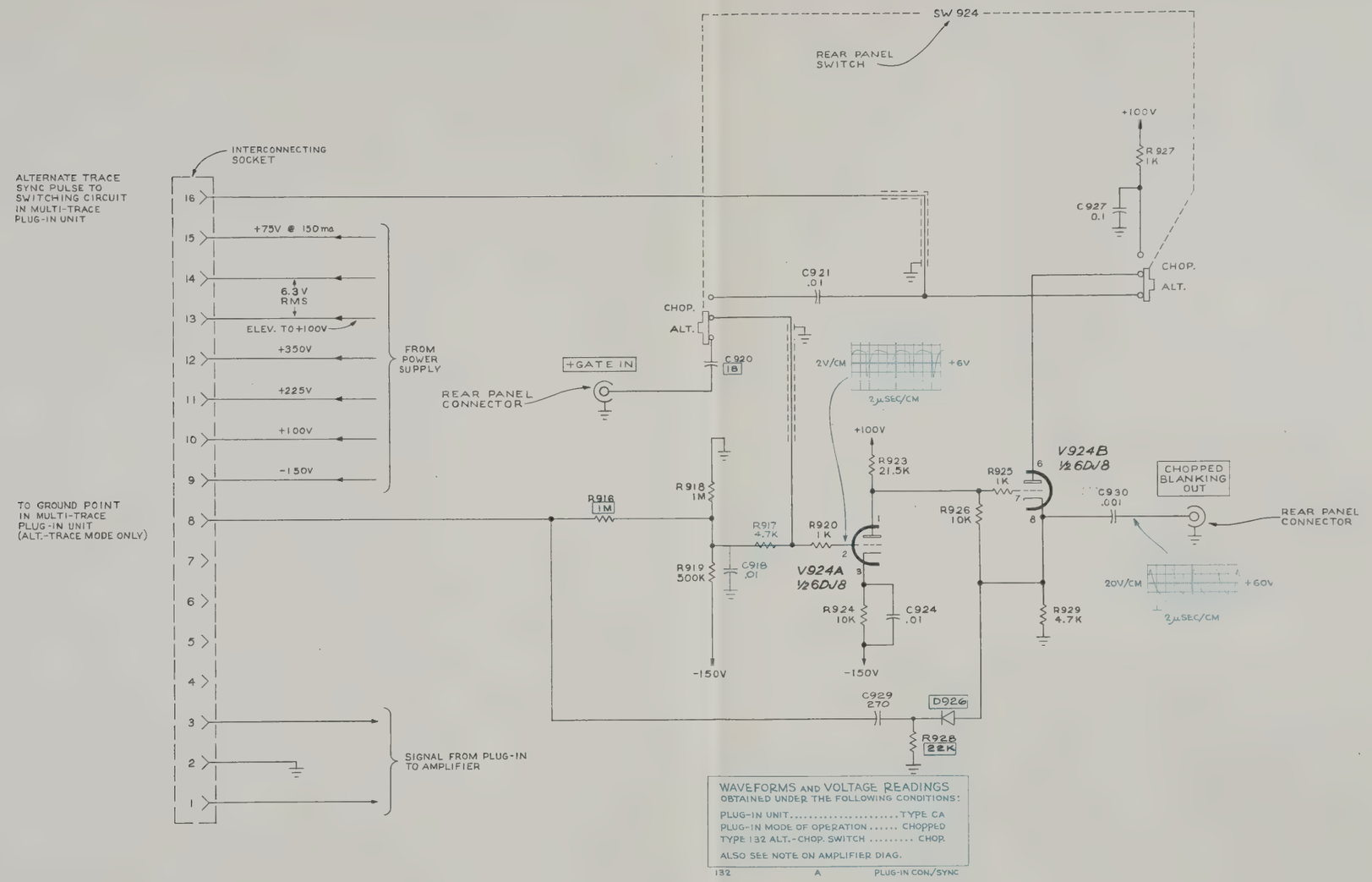

JN 666

PLUG-IN CONNECTOR & MULTI-TRACE SYNC

CIRCUIT NUMBERS 916 THRU 929

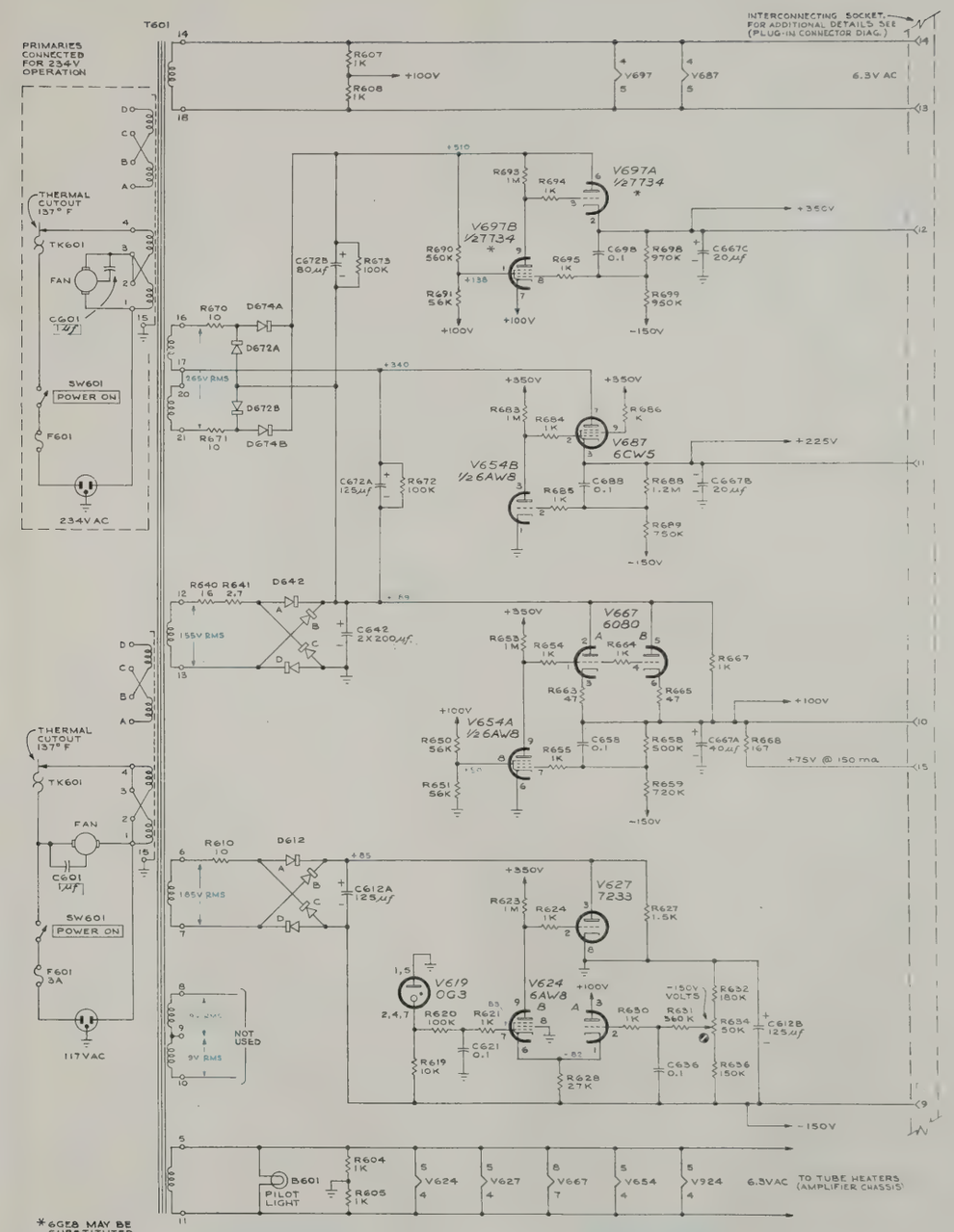

*6GE8 MAY BE SUBSTITUTED FOR 7734

TYPE 132

VOLTAGE READINGS TAKEN UNDER THE FOLLOWING CONDITIONS:
LINE VOLTAGE ..... 117 VAC
PLUG-IN UNIT ..... TYPE CA
INPUT SIGNAL ..... NONE
ALSO SEE NOTE ON AMPLIFIER DIAG.

132 PWR SPLY.

SEE PARTS LIST FOR EARLIER VALUES AND S/N CHANGES OF DAOTS MARKED WITH BLUE OUTLINE

MRH 864

POWER SUPPLY

CIRCUIT NUMBERS 601 THRU 699

POWER SUPPLY

FIG. 1 FRONT

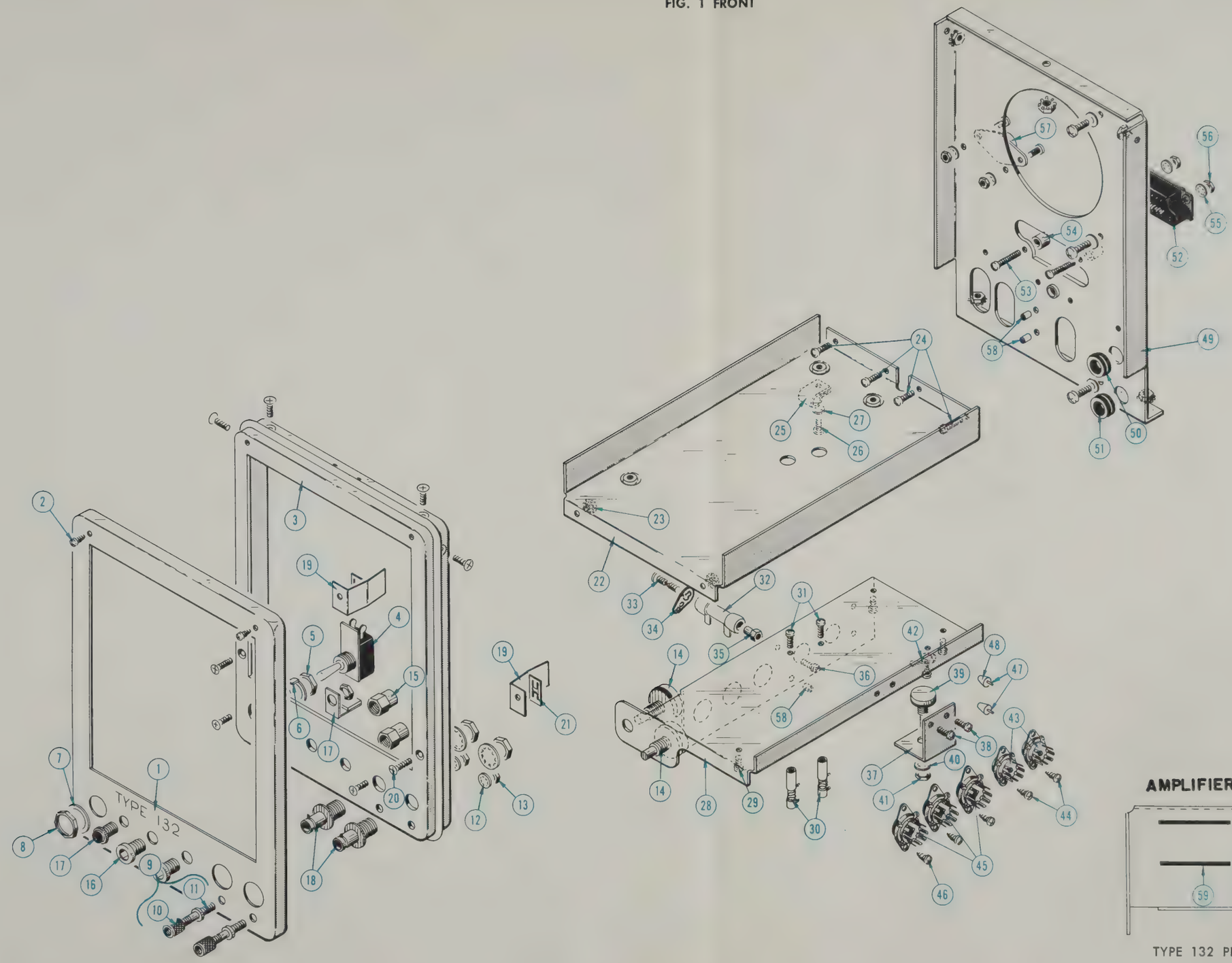

AMPLIFIER CHASSIS

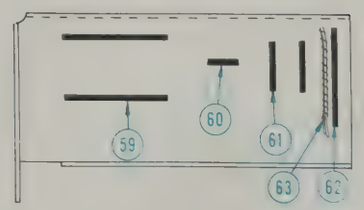

TYPE 132 PLUG-IN UNIT POWER SUPPLY

FIG. 1

+A

FIG. 2 POWER CHASSIS

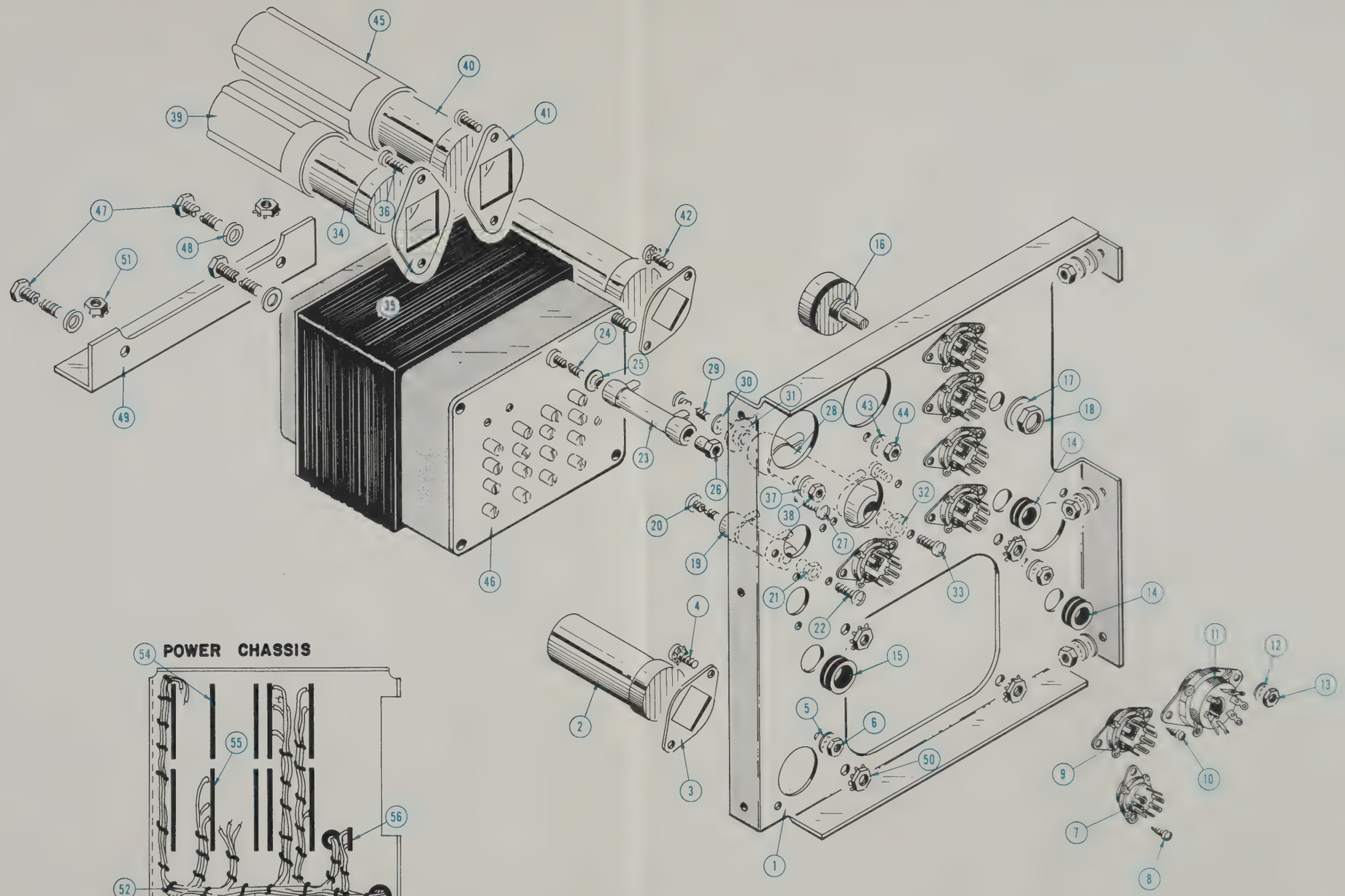

TYPE 132 PLUG-IN UNIT POWER SUPPLY

+A

FIG. 3 CABINET & RAILS

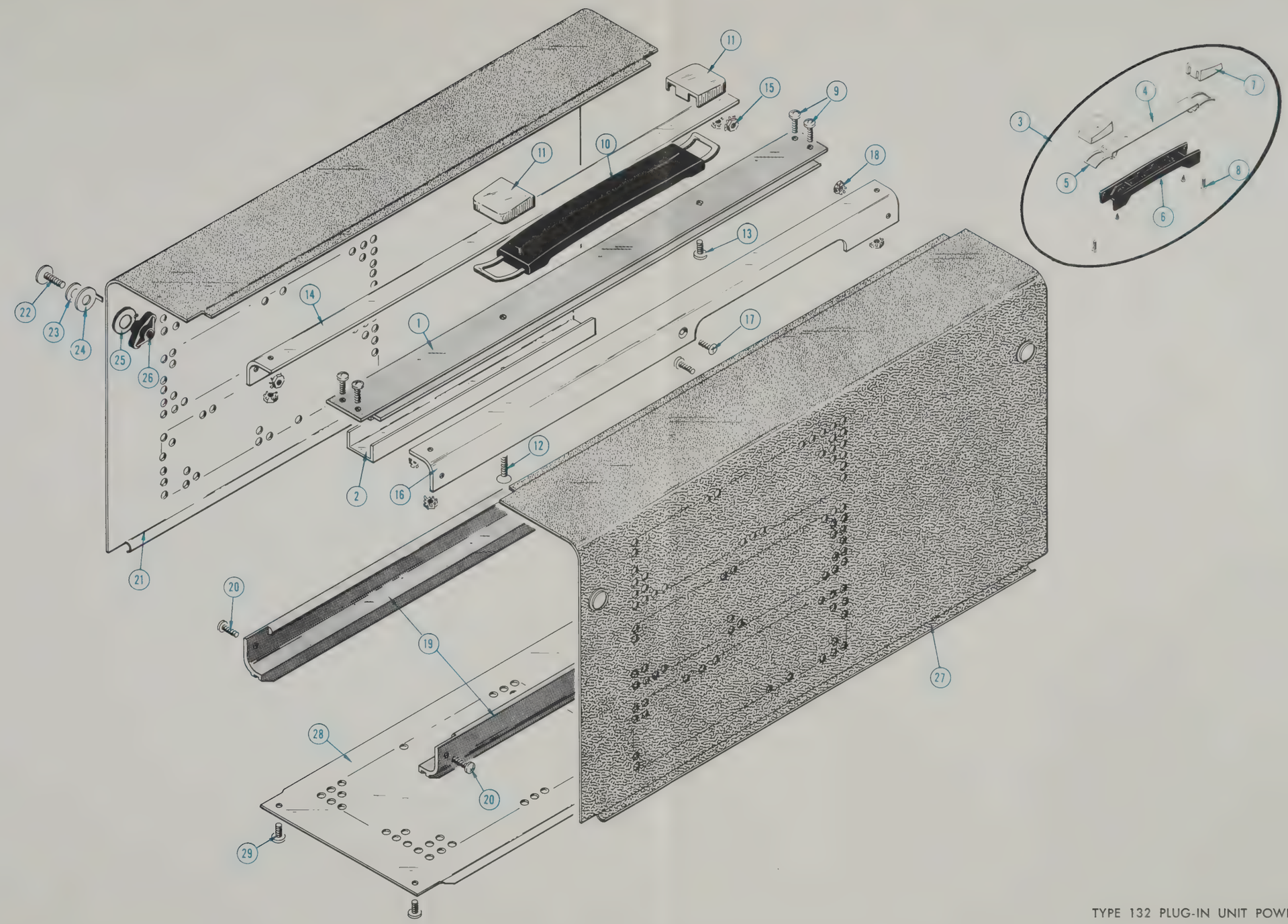

FIG. 4 REAR

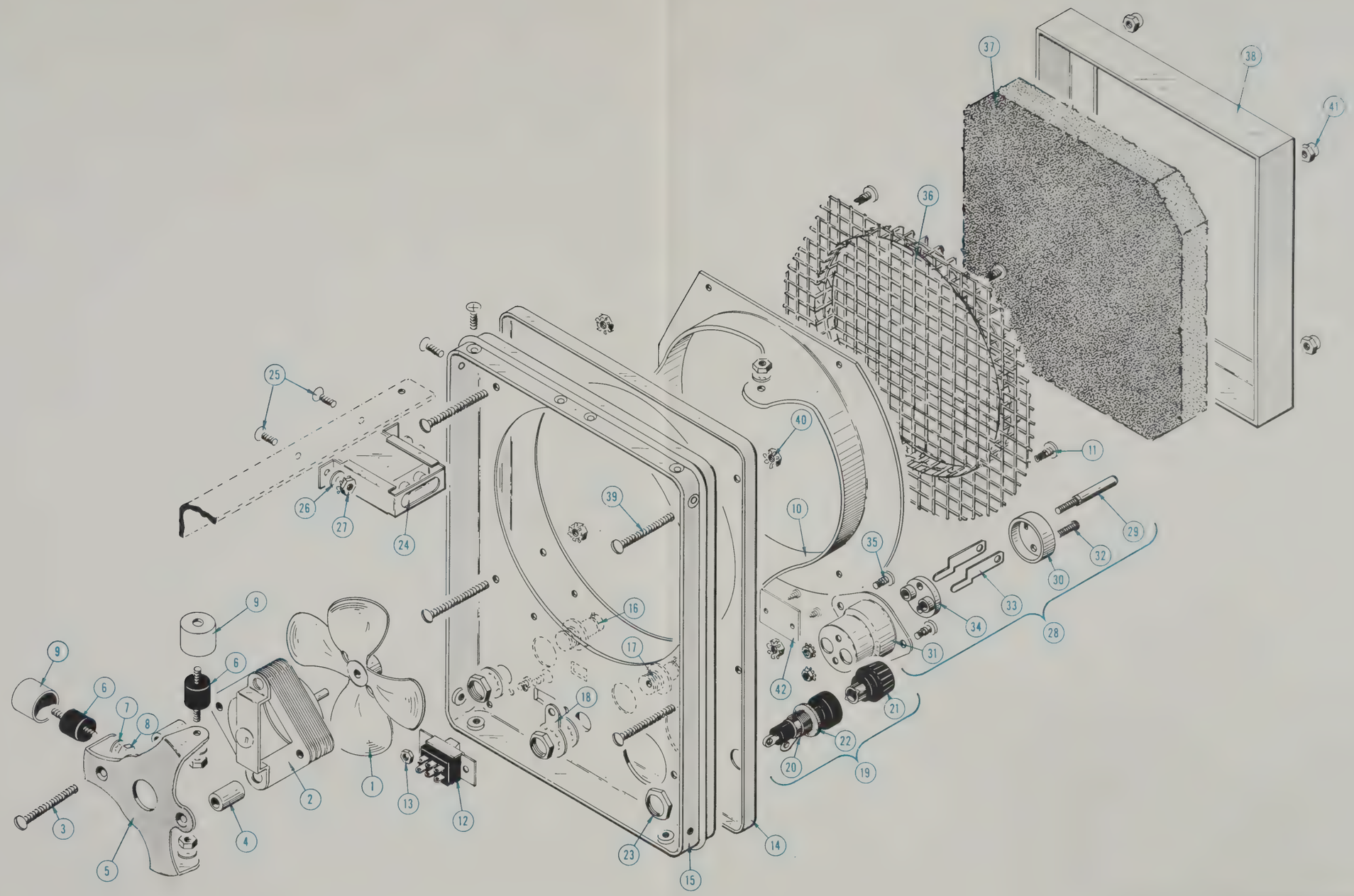

TYPE 132 PLUG-IN UNIT POWER SUPPLY

FIG. 4

MANUAL CHANGE INFORMATION

At Tektronix, we continually strive to keep up with latest electronic developments by adding circuit and component improvements to our instruments as soon as they are developed and tested.

Sometimes, due to printing and shipping requirements, we can't get these changes immediately into printed manuals. Hence, your manual may contain new change information on following pages. If it does not, your manual is correct as printed.

FIG. 5 STANDARD ACCESSORIES

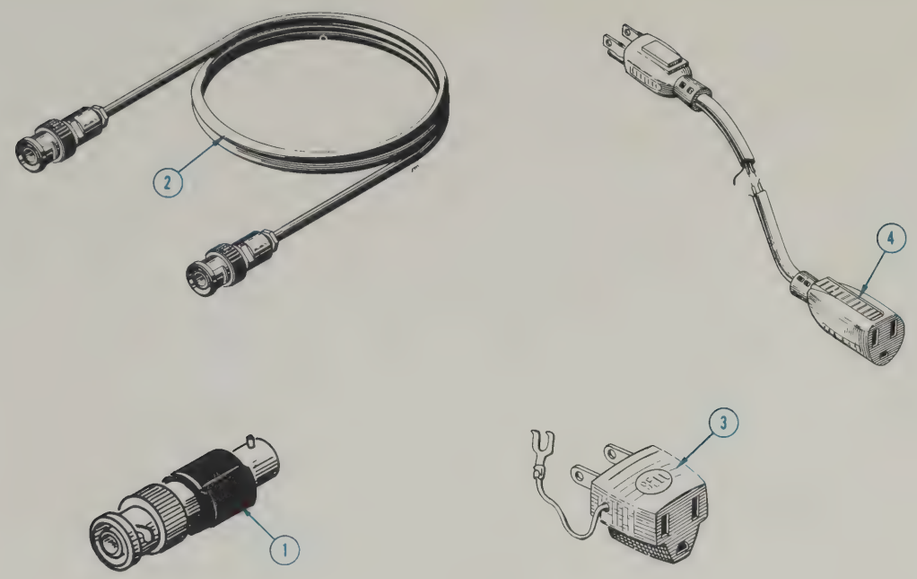

Fig. & Index No.	Tektronix Part No.	Serial/Model No. Eff	Disc	Qty	Description 1 2 3 4 5
5-1	011-0011-00	101	284	2	TERMINATION, 93 Ω, UHF
	011-0047-00	285	1029	2	TERMINATION, 93 Ω, UHF
	011-0056-00	1030		2	TERMINATION, 93 Ω BNC
-2	012-0003-00	101	1029	2	CABLE, 93 Ω, UHF
	012-0075-00	1030		2	CABLE, 93 Ω, BNC
-3	103-0013-00			1	ADAPTER, 3 to 2 wire
-4	161-0010-00	101	2269	1	CORD, power, 8 ft. w/male & female ends
	161-0010-03	2270		1	CORD, power, 8 ft. w/male & female ends
	070-0288-01			1	MANUAL, instruction (not shown)

MANUAL CHANGE INFORMATION

At Tektronix, we continually strive to keep up with latest electronic developments by adding circuit and component improvements to our instruments as soon as they are developed and tested.

Sometimes, due to printing and shipping requirements, we can't get these changes immediately into printed manuals. Hence, your manual may contain new change information on following pages. If it does not, your manual is correct as printed.